OPERATOR'S MANUAL

CLEAN BURN COIL TUBE BOILER MODELS:

CB-200-CTB-INT ***with CB-500-5W Burner & Metering Pump***
CB-350-CTB-INT ***with CB-551-H3-5W Burner & Metering Pump***
CB-500-CTB-INT ***with CB-551-H5-3W Burner & Metering Pump***

230 V / 50 Hz

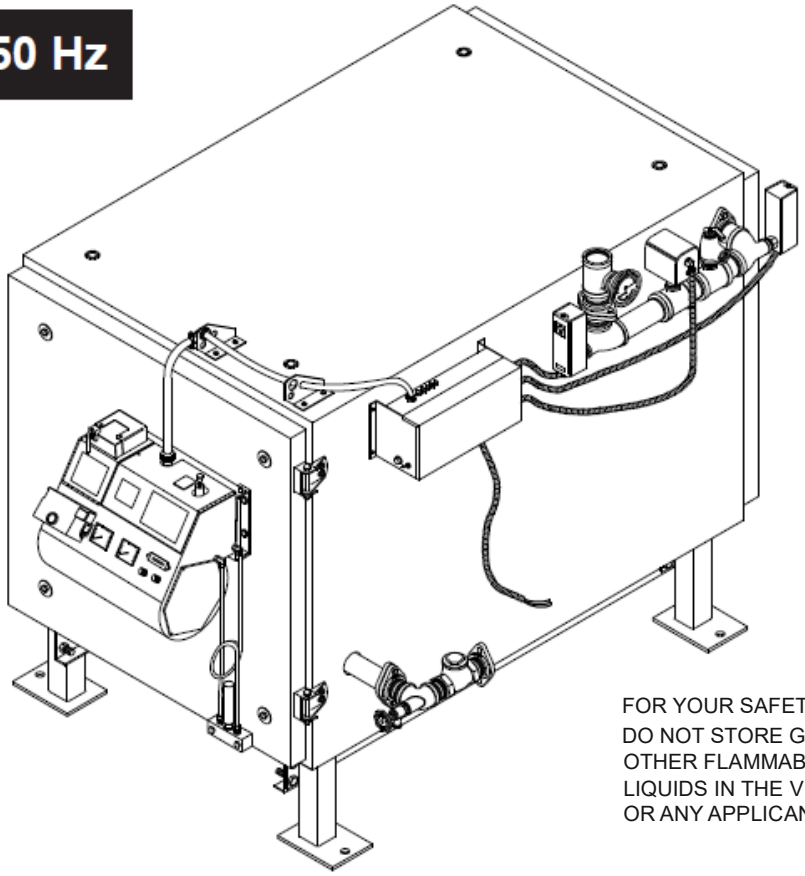

FOR YOUR SAFETY –
DO NOT STORE GASOLINE OR OTHER FLAMMABLE VAPORS AND LIQUIDS IN THE VICINITY OF THIS OR ANY APPLICANCE!!

PUBLICATION DATE: 4/26/2024, Rev. 9 **CLEAN BURN PART #43186**

WARNING: DO NOT assemble, install, operate, or maintain this equipment without first reading and understanding the information provided in this manual. Installation and service must be accomplished by qualified personnel. Failure to follow all safety precautions and procedures may result in property damage, serious personal injury, or death.

CLEAN BURN, INC. • 4109 Capital Circle • Janesville, WI 53546 • U.S.A.

The Clean Burn logo is a trademark of Clean Burn, Inc. All other brand or product names mentioned are the registered trademarks or trademarks of their respective owners. Copyright © 2024 Clean Burn, Inc. All rights reserved. No part of this publication may be reproduced, or distributed without the prior written permission of Clean Burn, Inc.

TABLE OF CONTENTS

SECTION 1: INTRODUCTION 1-1
Guide to this Manual 1-1
For Your Safety... 1-2
Guidelines for CTB Usage 1-4
Guidelines for Used Oil Tanks 1-5
Safety Labels 1-6

SECTION 2: UNPACKING 2-1
Removing the Shipping Crate 2-1
Unpacking and Inspecting All Components..... 2-1
Pre-Installation Considerations……..... 2-2

SECTION 3: COIL TUBE BOILER ASSEMBLY..... 3-1
Understanding Assembly 3-1
Installing the CTB on the Support Stand 3-4
Assembling the Dual-Stacked Boiler..... 3-5
Connecting the CTB……..... 3-8
Installing the Ceramic Sleeve in the Boiler……..... 3-9
Installing the Belt Guard and the Blower Guard 3-7
Checking the Burner Nozzle and Electrodes 3-11
Mounting the Burner on the Hinge Bracket 3-12
Installing the Connector Block on the CTB Door 3-12
Installing the Oil Line Tubing 3-13
Installing the Air Line Tubing 3-14
Locking the Burner into Firing Position 3-14

SECTION 4: COIL TUBE BOILER INSTALLATION 4-1
Understanding Installation..... 4-1
Important Safety Guidelines for Safe Installation 4-1
Important Notes to the Electrician 4-2
Typical Installation Diagrams..... 4-3
Combustion Air Requirements……..... 4-5
Oil Tank Installation Specifications..... 4-7
Installing the Tank Vent and Emergency Vent 4-8
Installing the Metering Pump 4-9
Preparing for Installation 4-9
Standard Mounting: Vertical Positioning 4-9
Alternate Mounting: Horizontal Positioning 4-11
Connecting Water to the Coil Tube Boiler..... 4-12
Filling the CTB with Water..... 4-12

TABLE OF CONTENTS

Installing the Suction Oil Line Components....4-13
Installing the Pressure Relief Oil Line Back to the Tank....4-16
Installing the Pressure Oil Line Components....4-17
Installing the Compressed Air Line....4-17
Wiring the Coil Tube Boiler….....4-18
Wiring to the Coil Tube Boiler....4-18
Wiring to the Metering Pump....4-19
Wiring the Load Loop Circulator....4-19
Installing the Stack....4-20
Stack Design and Specifications....4-20
Installing the Interior Stack....4-22
Installing the Barometric Damper....4-23
Installing the Optional Stack Safety Switch....4-24
Resetting the Stack Safety Switch....4-25
Understanding the Function of the Stack Safety Switch....4-25
Installing the Stack Penetration....4-26
Installing the Exterior Stack....4-26
Installing the Stack Cap....4-26
Installing the Draft Inducer....4-28
Installing the Wall Thermostat or Aquastat....4-28
Replacing the Wall Thermostat Batteries....4-29
Inspecting the Coil Tube Boiler Installation....4-29

SECTION 5: METERING PUMP PRIMING....5-1
Understanding Metering Pump Priming....5-1
Required Tools and Materials....5-1
Priming the Metering Pump....5-2
Vacuum Testing the Oil Pump....5-4

SECTION 6: STARTING AND ADJUSTING THE BURNER....6-1
Understanding Burner Startup and Adjustment....6-1
Preparing the Hydronics System for Burner Startup....6-1
Preparing the Burner for Startup....6-1
Starting the Burner....6-3

TABLE OF CONTENTS

SECTION 7: RESETTING THE OIL PRIMARY CONTROL....7-1
The Oil Primary Control 7-1
Resetting the Oil Primary Control 7-1

SECTION 8: ADJUSTING THE DRAFT OVER FIRE 8-1
Understanding the Importance of Draft....8-1
Checking for Correct Draft Over Fire 8-1
Adjusting the Barometric Damper 8-2
Adjusting Draft Overfire on CTBs with Draft Inducers....8-2
Solving Draft Overfire Problems 8-3
Understanding the Effect of Exhaust Fans on Draft 8-3
Checking Draft Overfire to Determine Severity of Backdraft....8-3
Installing a Make-up Air Louver 8-4

SECTION 9: MAINTENANCE 9-1
Understanding Maintenance....9-1
Periodic Burner Inspection 9-2
Cleaning the Canister Filter 9-3
Servicing the Metering Pump 9-4
Cleaning the Check Valve / Screen 9-5
Cleaning the Oil Tank 9-6
Cleaning Ash from the CTB 9-7
Cleaning and Maintaining the Draft Inducer 9-8
Annual Burner Tune-up 9-9
End of Season Maintenance 9-9

SECTION 10: THE CTB HYDRONIC SYSTEM....10-1
Understanding the CTB Hydronic System....10-1
CTB System Function and Configuration....10-2
CTB Setup Options 10-4
Guidelines for CTB Setup and Operation 10-7
Guidelines for Preventing Oxygen Contamination....10-8
Guidelines for Initial Cleaning and Maintaining Water Quality....10-8
Guidelines for CTB Operation....10-8

SECTION 11: TROUBLESHOOTING 11-1
Flow Chart 11-2
Troubleshooting Tables 11-3

TABLE OF CONTENTS

APPENDIX A

Detailed CTB Specifications A-1
CTB Technical Specifications..... A-1
Burner Technical Specifications..... A-2
CTB Accessories and Parts Reference..... A-4
CTB Dimensions A-5
Burner Components A-10
Removing the Nozzle for Cleaning A-15
CTB components A-16

APPENDIX B

Wiring Diagrams B-1
Burner Wiring Diagram B-1
Ladder Schematic B-2
CTB Control Box Wiring Diagram B-3
Metering Pump Wiring Schematic B-4
Understanding the Oil Primary Control..... B-5

APPENDIX C

Boiler Service Record C-1

SECTION 1: INTRODUCTION

Guide to this Manual

This manual contains all the information necessary to safely install and operate the 230 V / 50 Hz Clean Burn Coil Tube Boilers (CTB), Models CB-200-CTB-INT, CB-350-CTB-INT, and CB-500-CTB-INT. Consult the Table of Contents for a detailed list of topics covered. We hope you'll find this manual's step-by-step procedures easy to follow and understand. Should questions arise, please contact your Clean Burn dealer before starting any of the procedures in this manual.

As you follow the directions in this manual, you'll discover that assembling and operating your new CTB involves six basic activities as outlined here:

- **UNPACKING ..... (Section 2)**
- **ASSEMBLY..... (Section 3)**
- **INSTALLATION ..... (Section 4)**
- **OPERATION**
  - **Metering Pump Priming ..... (Section 5)**
  - **Starting and Adjusting the Burner ..... (Section 6)**
  - **Resetting the Oil Primary Control..... (Section 7)**
  - **Adjusting the Draft ..... (Section 8)**
- **MAINTENANCE..... (Section 9)**
- **THE CTB HYDRONICS SYSTEM..... (Section 10)**

This manual also contains important and detailed technical reference materials which are located at the back of the manual in the Appendixes.

Please read all sections carefully--including the following safety information--before beginning any installation/ operation procedures. Doing so ensures your safety and the optimal performance of your Clean Burn Coil Tube Boiler.

For Your Safety...

For your safety, Clean Burn documentation contains the following types of safety statements (listed here in order of increasing intensity):

- **NOTE:** A clarification of previous information or additional pertinent information.
- **ATTENTION:** A safety statement indicating that potential equipment damage may occur if instructions are not followed.

CAUTION: A safety statement that reminds of safety practices or directs attention to unsafe practices which could result in personal injury if proper precautions are not taken.

WARNING: A *strong* safety statement indicating that a hazard exists which can result in injury or death if proper precautions are not taken.

DANGER! *The utmost levels of safety must be observed;* an extreme hazard exists which would result in high probability of death or irreparable serious personal injury if proper precautions are not taken.

In addition to observing the specific precautions listed throughout the manual, **the following general precautions apply and *must be heeded* to ensure proper, safe boiler operation.**

DANGER! DO NOT create a fire or explosion hazard by storing or using gasoline or other flammable or explosive liquids or vapors near your boiler.

DANGER! DO NOT operate your CTB if excess oil, oil vapor or fumes have accumulated in or near your CTB. As with any oil burning appliance, improper installation, operation or maintenance may result in a fire or explosion hazard.

WARNING: Ensure that your boiler is properly installed, adjusted, operated and maintained. Improper installation, adjustment, operation, or maintenance can adversely affect the proper, safe operation of your boiler and may cause serious personal injury/death.

WARNING: DO NOT add inappropriate or hazardous materials to your used oil, such as:

- Anti-freeze
- Carburetor cleaner
- Paint thinner
- Parts washer solvents
- Gasoline
- Oil additives
- Any other inappropriate/hazardous material

WARNING: Burning chlorinated materials (chlorinated solvents and oils) is *illegal,* will *severely damage* your heat exchanger, and adversely affect the proper, safe operation of your CTB. Instruct your personnel to *never* add hazardous materials to your used oil.

For Your Safety... (continued)

WARNING: Never alter or modify your CTB without prior written consent of Clean Burn, Inc. Unauthorized modifications or alteration can adversely affect the proper, safe operation of your CTB.

WARNING: The burner which is shipped with your Clean Burn CTB is to be used *only* with your boiler according to the instructions provided in this manual. DO NOT use the burner for any other purpose!

WARNING: Electrical installation of the boiler is to be performed only by qualified personnel (i.e. licensed electrician/engineer). Improper electrical installation can adversely affect the proper, safe operation of the boiler and may cause serious personal injury/death.

WARNING: Install the CTB in an area away from the main shop traffic. ***It is essential for personal safety that only manufacturer-trained, qualified personnel have access to operate and maintain the boiler.***

WARNING: DO NOT operate your CTB when the ambient temperature is above 35 ºC (95 ºF).

WARNING: ***The Best Operator is a Careful Operator!*** By using common sense, observing general safety rules, and adhering to the precautions specific to the equipment, you, the operator, can promote safe equipment operation. ***Failure to use common sense, observe general safety rules, and adhere to the precautions specific to the equipment may result in equipment damage, fire, explosion, personal injury and/or death.***

WARNING: The installation, operation, and maintenance of this equipment must be accomplished by qualified personnel and in compliance with the specifications in the Clean Burn Operator's Manual and with all national, state, and local codes or authorities having jurisdiction over environmental control, building inspection and fuel, fire and electrical safety.

WARNING: This equipment is for commercial and/or industrial use only. It is NOT for residential use.

WARNING: Call your Clean Burn dealer for service. DO NOT allow untrained, unauthorized personnel to service your CTB. Make sure that your CTB receives periodic maintenance to ensure optimal performance.

Failure to comply with these standards and requirements may result in equipment damage, fire, explosion, personal injury and/or death.

Guidelines for Coil Tube Boiler Usage

- This boiler is designed to burn the following fuels:
    - Used crankcase oil up to 50 SAE
    - Used transmission fluid
    - Used hydraulic oils
    - #2, #4, and #5 fuel oils

  NOTE: Used oils may contain other substances, including gasoline, that may hinder performance.

- Make sure you comply with all environmental regulations concerning the use of your boiler. These regulations require that:
    - Your used oil is generated on-site. You may also accept used oil from "do-it-yourself" oil changers.
    - Hazardous wastes, such as chlorinated solvents, are NOT to be mixed with your used oil.
    - The flue gases are vented to the outdoors with an appropriate stack.
    - Your used oil is recycled as fuel for "heat recovery". DO NOT operate your heater in warm weather just to burn oil.

  NOTE: Contact your Clean Burn dealer for current environmental regulations.

- If your CTB ever requires service, call your Clean Burn dealer. DO NOT allow untrained, unauthorized personnel to service your CTB. Make sure that your boiler receives annual preventative maintenance to ensure optimal performance.

Guidelines for Used Oil Tanks

For the safe storage of used oil and the safety of persons in the vicinity of the used oil supply tank, ensure that your tank installation adheres to the following safety guidelines:

- **The tank installation must meet all national and local codes.** Consult your local municipal authorities for more information as necessary.
- **Review and adhere to the safety guidelines for used oil supply tanks as stated in the WARNING shown.**
- Ensure that the tank for your boiler installation complies with all code and safety requirements as stated here. If the tank does not comply, DO NOT use it.
- If you do not have a copy of the tank safety label pictured at right, please contact your Clean Burn dealer for the label, which is to be affixed directly on your used oil supply tank.

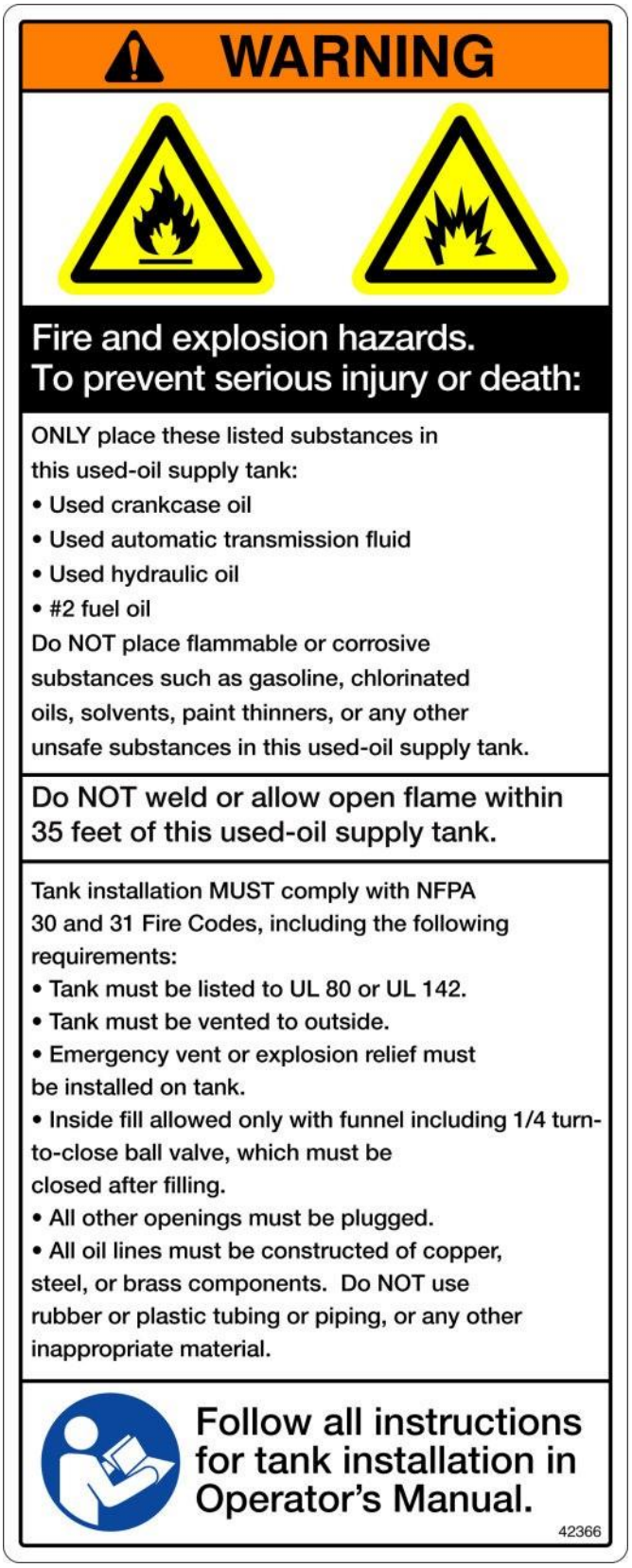

Safety Labels

Following are the locations and descriptions of all labels on your CTB. Please note that some labels denote model number, model description, etc. while others contain important safety messages.

Each **Safety Label** contains an important safety message starting with a key word as discussed earlier in this section (e.g. ATTENTION, CAUTION, WARNING, DANGER). For your safety and the safe operation of your boiler, review all labels and heed all safety messages as printed on the labels.

If any labels on your Clean Burn CTB ever become worn, lost or painted over, please call your Clean Burn dealer for free replacements.

CTB Cabinet Labels:

Label Part #	Description
42367	Clean Burn Safety Warning Label (multiple messages - fire/shock/burn hazards)
42457	Made in USA/Patent Pending Label
42027	Burn Hazard / Hazardous Voltage Warning Label
42308	Header Label
42481	CB-200-CTB-I Data Label
42306	CB-350-CTB-I Data Label
42503	CB-500-CTB-I Data Label
42030	Electrical Shock Hazard Warning Label
42421	CTB Hot Water Caution Label
42216	Clean Burn Logo Label - 22 cm x 11 cm (8.75" x 4.25")
42297	Clean Burn Logo Label - 51 cm x 20 cm (20" x 8")
42465	CB-200-CTB Model # Label
42286	CB-350-CTB Model # Label
42502	CB-500-CTB Model # Label

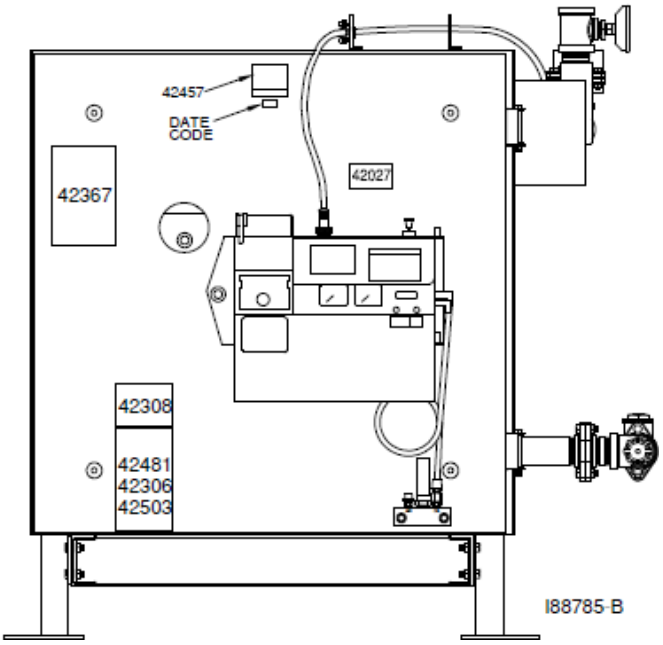

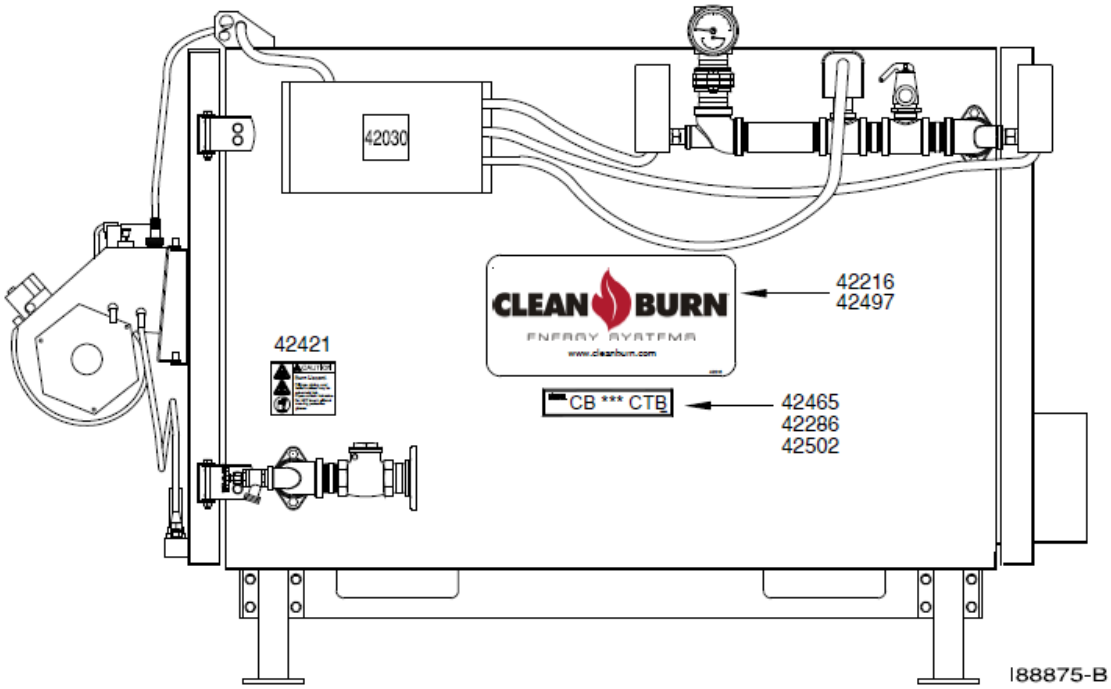

CTB Cabinet *Safety* Labels:

WARNING

Hazardous voltage.

To prevent serious injury, shut OFF main power to unit before removing cover.

Line voltage is present on most subbase terminals when power is ON. If the furnace is not wired correctly, fire, shock or damage could result.

- ONLY a qualified electrician should wire this furnace.
- ONLY use copper conductors.

42030

WARNING

Burn Hazard.
Hazardous Voltage.

Burner may fire at any time. Disconnect burner power cord before swinging open burner or clean-out door.

42027

WARNING

Fire, explosion and burn hazards:

Maintain clearances from combustibles as listed on unit. ONLY burn used crankcase oil, automatic transmission fluid, hydraulic oil, or #2 fuel oil. NEVER burn any other substances in this unit.

Hot gases and ash may be released when inspection port is opened.

- Wear safety goggles and hand protection when opening inspection port.
- Keep face away and open port slowly.

To avoid possible injury, death, or equipment damage, read and understand operator's manuals and all safety precautions before installing, operating, or servicing this equipment.

42367

CTB Cabinet *Safety* Labels (continued):

CTB *Specification* Labels:

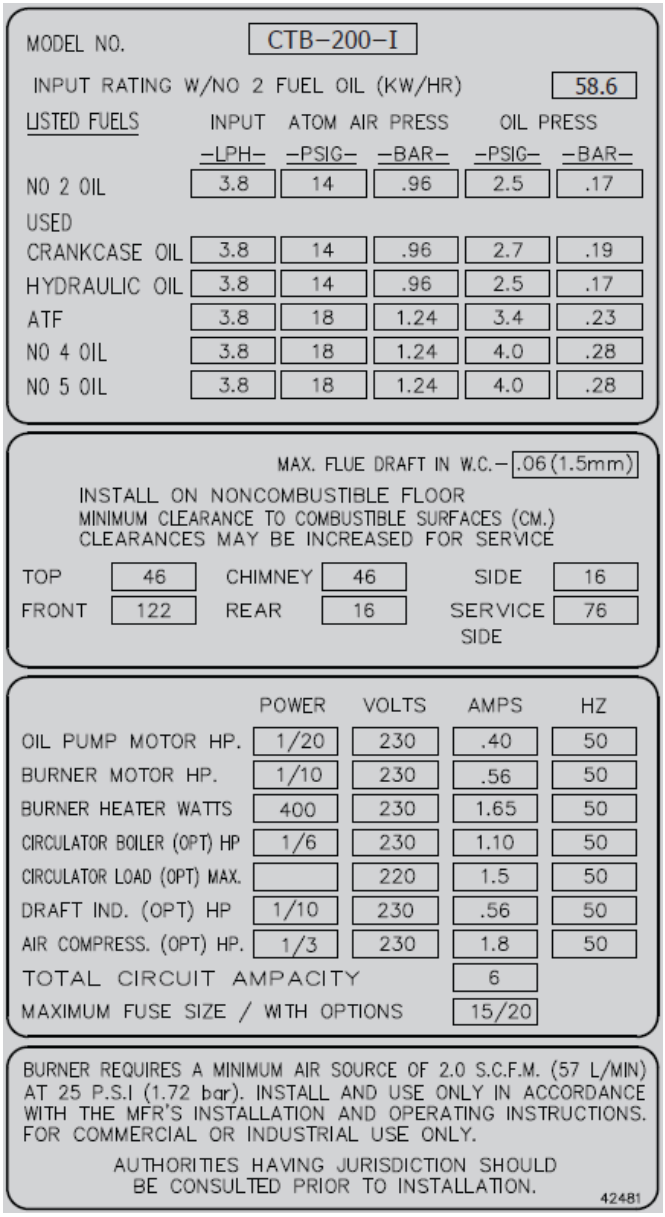

MODEL NO. CTB–200–I

INPUT RATING W/NO 2 FUEL OIL (KW/HR) 58.6

LISTED FUELS	INPUT -LPH-	ATOM AIR PRESS -PSIG-	ATOM AIR PRESS -BAR-	OIL PRESS -PSIG-	OIL PRESS -BAR-
NO 2 OIL	3.8	14	.96	2.5	.17
USED					
CRANKCASE OIL	3.8	14	.96	2.7	.19
HYDRAULIC OIL	3.8	14	.96	2.5	.17
ATF	3.8	18	1.24	3.4	.23
NO 4 OIL	3.8	18	1.24	4.0	.28
NO 5 OIL	3.8	18	1.24	4.0	.28

MAX. FLUE DRAFT IN W.C.– .06 (1.5mm)

INSTALL ON NONCOMBUSTIBLE FLOOR
MINIMUM CLEARANCE TO COMBUSTIBLE SURFACES (CM.)
CLEARANCES MAY BE INCREASED FOR SERVICE

TOP	46	CHIMNEY	46	SIDE	16
FRONT	122	REAR	16	SERVICE SIDE	76

	POWER	VOLTS	AMPS	HZ
OIL PUMP MOTOR HP.	1/20	230	.40	50
BURNER MOTOR HP.	1/10	230	.56	50
BURNER HEATER WATTS	400	230	1.65	50
CIRCULATOR BOILER (OPT) HP	1/6	230	1.10	50
CIRCULATOR LOAD (OPT) MAX.		220	1.5	50
DRAFT IND. (OPT) HP	1/10	230	.56	50
AIR COMPRESS. (OPT) HP.	1/3	230	1.8	50
TOTAL CIRCUIT AMPACITY			6	
MAXIMUM FUSE SIZE / WITH OPTIONS			15/20	

BURNER REQUIRES A MINIMUM AIR SOURCE OF 2.0 S.C.F.M. (57 L/MIN) AT 25 P.S.I (1.72 bar). INSTALL AND USE ONLY IN ACCORDANCE WITH THE MFR'S INSTALLATION AND OPERATING INSTRUCTIONS. FOR COMMERCIAL OR INDUSTRIAL USE ONLY.

AUTHORITIES HAVING JURISDICTION SHOULD BE CONSULTED PRIOR TO INSTALLATION.

42481

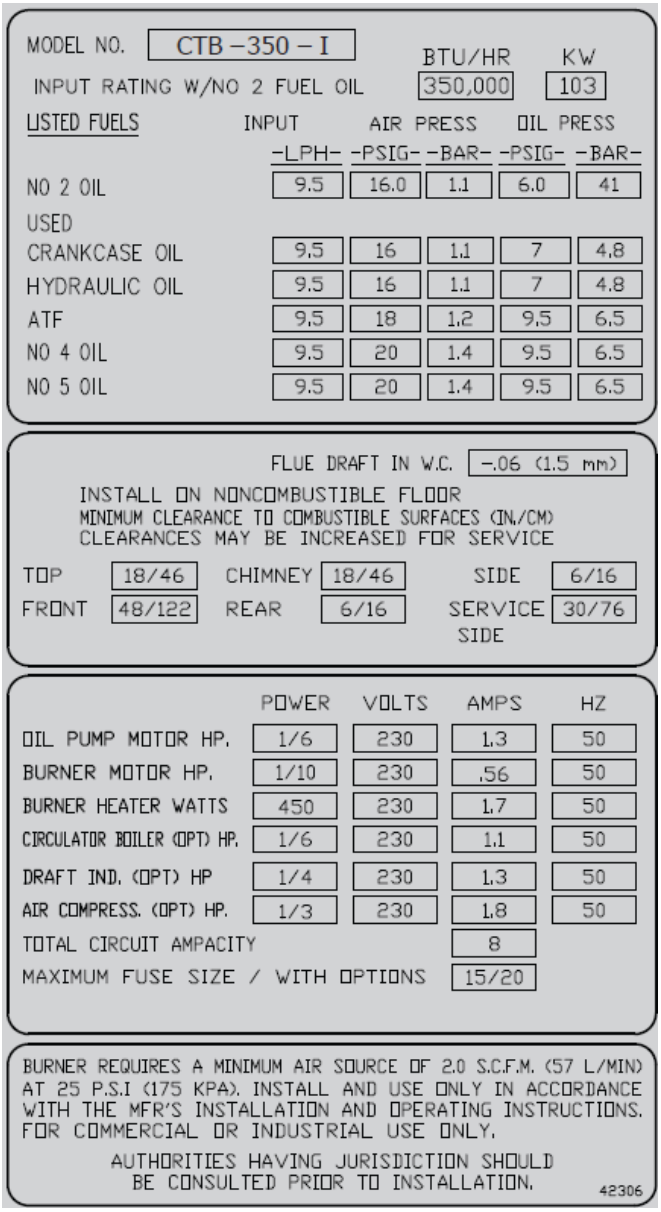

MODEL NO. CTB –350 – I

	BTU/HR	KW
INPUT RATING W/NO 2 FUEL OIL	350,000	103

LISTED FUELS	INPUT -LPH-	AIR PRESS -PSIG-	AIR PRESS -BAR-	OIL PRESS -PSIG-	OIL PRESS -BAR-
NO 2 OIL	9.5	16.0	1.1	6.0	41
USED					
CRANKCASE OIL	9.5	16	1.1	7	4.8
HYDRAULIC OIL	9.5	16	1.1	7	4.8
ATF	9.5	18	1.2	9.5	6.5
NO 4 OIL	9.5	20	1.4	9.5	6.5
NO 5 OIL	9.5	20	1.4	9.5	6.5

FLUE DRAFT IN W.C. –.06 (1.5 mm)

INSTALL ON NONCOMBUSTIBLE FLOOR
MINIMUM CLEARANCE TO COMBUSTIBLE SURFACES (IN./CM)
CLEARANCES MAY BE INCREASED FOR SERVICE

TOP	18/46	CHIMNEY	18/46	SIDE	6/16
FRONT	48/122	REAR	6/16	SERVICE SIDE	30/76

	POWER	VOLTS	AMPS	HZ
OIL PUMP MOTOR HP.	1/6	230	1.3	50
BURNER MOTOR HP.	1/10	230	.56	50
BURNER HEATER WATTS	450	230	1.7	50
CIRCULATOR BOILER (OPT) HP.	1/6	230	1.1	50
DRAFT IND. (OPT) HP	1/4	230	1.3	50
AIR COMPRESS. (OPT) HP.	1/3	230	1.8	50
TOTAL CIRCUIT AMPACITY			8	
MAXIMUM FUSE SIZE / WITH OPTIONS			15/20	

BURNER REQUIRES A MINIMUM AIR SOURCE OF 2.0 S.C.F.M. (57 L/MIN) AT 25 P.S.I (175 KPA). INSTALL AND USE ONLY IN ACCORDANCE WITH THE MFR'S INSTALLATION AND OPERATING INSTRUCTIONS. FOR COMMERCIAL OR INDUSTRIAL USE ONLY.

AUTHORITIES HAVING JURISDICTION SHOULD BE CONSULTED PRIOR TO INSTALLATION.

42306

CTB *Specification* Labels (continued):

MODEL NO. CTB – 500 – I

INPUT RATING W/NO 2 FUEL OIL (KW/HR) 147.0

LISTED FUELS	INPUT -LPH-	ATOM AIR PRESS -PSIG-	ATOM AIR PRESS -BAR-	OIL PRESS -PSIG-	OIL PRESS -BAR-
NO 2 OIL	13.5	16	1.1	2.5	0.17
USED CRANKCASE OIL	13.5	16	1.1	2.5	0.17
HYDRAULIC OIL	13.5	22	1.5	2.1	0.15
ATF	13.5	20	1.4	2.3	0.16
NO 4 OIL	13.5	16	1.1	2.5	0.17
NO 5 OIL	13.5	16	1.1	2.5	0.17

MAX. FLUE DRAFT IN W.C. – .06 (1.5mm)

INSTALL ON NONCOMBUSTIBLE FLOOR
MINIMUM CLEARANCE TO COMBUSTIBLE SURFACES (CM.)
CLEARANCES MAY BE INCREASED FOR SERVICE

TOP	46	CHIMNEY	46	SIDE	16
FRONT	122	REAR	16	SERVICE SIDE	76

	POWER	VOLTS	AMPS	HZ
OIL PUMP MOTOR HP.	1/20	230	0.40	50
BURNER MOTOR HP.	1/10	230	0.70	50
BURNER HEATER WATTS	500	230	1.9	50
CIRCULATOR BOILER (OPT)	1/2	230	2.7	50
CIRCULATOR LOAD (OPT) MAX.				
DRAFT INDUCER HP	1/4	230	1.3	50
AIR COMPRESS. (OPT) HP.	1/2	230	3.0	50
TOTAL CIRCUIT AMPACITY			10.0	
MAXIMUM FUSE SIZE / WITH OPTIONS			20.0	

BURNER REQUIRES A MINIMUM AIR SOURCE OF 2.0 S.C.F.M. (57 L/MIN) AT 25 P.S.I (1.72 bar). INSTALL AND USE ONLY IN ACCORDANCE WITH THE MFR'S INSTALLATION AND OPERATING INSTRUCTIONS. FOR COMMERCIAL OR INDUSTRIAL USE ONLY.

AUTHORITIES HAVING JURISDICTION SHOULD BE CONSULTED PRIOR TO INSTALLATION.

42503

CTB Burner Labels

Label Part #	Description
42005	Sold and Serviced By Label
42004	Burner Safety Warning Label (High Voltage/Moving Parts Hazards)
42000	Burner Safety Warning Label (Fire/Explosion Hazard - Reset Button)
42235	Burner Safety Warning Label (Fire/Explosion Hazard - Burner Installation and Service)
42470	CB-500-5W Burner Model/Serial Number
42483	CB-551-5W Burner Model/Serial Number
42508	CB-551-H5-5W Burner Model/Serial Number
42229	Clean Burn Logo/Burner Description Label
42023	Burner Power Label

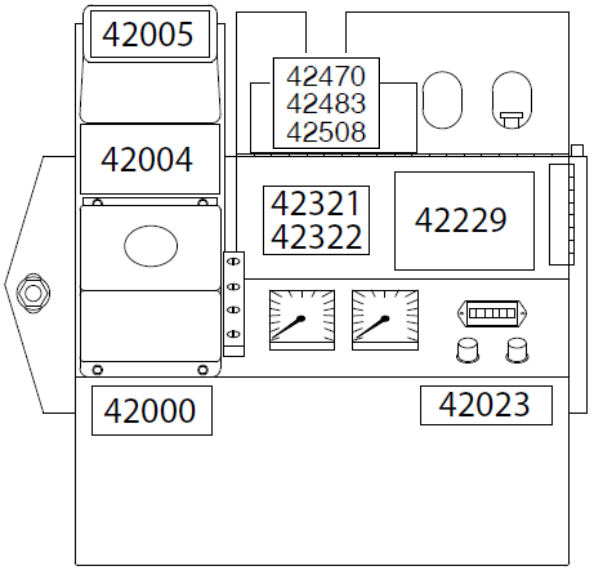

CTB Burner *Safety* Labels

SECTION 2: UNPACKING & PRE-INSTALLATION CONSIDERATIONS

Before assembling your coil tube boiler (CTB), you must accomplish the following activities described in this section:

- Removing the Shipping Crate
- Unpacking and Inspecting All Components
- Warranty Registration
- Review the Pre-Installation Considerations

Removing the Shipping Crate

1. Carefully remove the top boards of the shipping crate. Then remove the front, back, and side panels.
2. Remove the bolts holding the boiler on the shipping pallet.
3. Carefully lift the CTB off the shipping pallet with a forklift.

ATTENTION: DO NOT attempt to slide the CTB out of the crate--you may damage it.

Unpacking and Inspecting All Components

Following is an itemized list of all components you should have received in your Clean Burn CTB shipment. Open all shipping containers and inspect all components according to the list. Immediately notify the freight company and your Clean Burn dealer in case of shipping damage or shortage(s). Keep all components together so you will have them as needed for boiler assembly and installation.

CTB Component List

- Coil Tube Boiler with factory-installed controls (including operating aquastat, high temperature cut-off, flow switch, relief valve, and check valve)

Components packed inside boiler:

- Ceramic combustion chamber sleeve
- Combustion chamber sleeve mounting stand
- Ceramic target (pre-mounted)
- Canister filter
- Vacuum gauge
- Check valve with screen (for tank)
- Boiler gauge
- Tube sealant
- Burner hook-up kit
- Barometric damper
- Burner
- Oil pump (metering pump)
- CTB base stand with hardware
- Draft Inducer

NOTE: You may have received additional boxes or skids if you ordered optional accessories.

Pre-Installation Considerations

The following information is critical to the proper installation of your Clean Burn Coil Tube Boiler system. Read this section carefully before starting any other procedures.

Determining the CTB System Setup

Before installing the CTB, you must determine the following which relate to your installation:

(1) The **type of oil storage tank** you will be using (related information in Section 4)**
(2) The **positioning of your oil pump** (related information in Section 4)
(3) The **appropriate size for your oil lines** (related information in Section 4)
(4) The **electrical requirements** for your CTB installation (related information in Section 4)
(5) The type of **hydronic installation** you will be using (related information in Section 10)

****IMPORTANT NOTE:** If you are installing an inside oil tank in the same room as the boiler, you must allow a 1.5 m (5 ft) minimum clearance between the tank and the boiler. ***The oil tank should be set and installed in position BEFORE the boiler is installed.***

Determining the CTB System Setup

The location you select for your CTB must allow the following:

- Installation in a dedicated boiler/mechanical room with a minimum fire rating of two (2) hours.
- Installation on a substantial, level, non-combustible concrete floor (minimum 10 cm / 4" thick).
- Proper clearances from combustibles. *Verify according to your local safety codes.*
- Safe, easy access for servicing.
- Adequate combustion air per national and local codes.
- Proper stack installation and materials.

WARNING: For the safe installation and operation of the CTB, the boiler cannot be raised above the floor level, suspended from the ceiling, installed on a raised platform, or placed over top of any equipment, office space, parts room, etc. or installed in any other manner than directly on a concrete floor.

Selecting a Location (continued)

Adhere to the following *minimum* clearances from combustible surfaces. Specifications are also provided for servicing clearance. **Be sure to check local codes which may differ from these specifications.** Refer to Figure 2A for a single CTB and Figure 2B for dual-stacked CTB boilers.

Fig. 2A and 2B Description		Clearance from Combustibles	Clearance for Service
A	Above	46 cm (18" (inches))	46 cm (18")
B	Front	61 cm (24")	122 cm (48")
C	Stack	46 cm (18")	46 cm (18")
D	Rear	15 cm (6")	102 cm (40")
E	L.H. Side	15 cm (6") *	15 cm (6") *
F	R.H. Side	76 cm (30")	76 cm (30")
G	Bottom	15 cm (6")	15 cm (6")

** 91 cm (36") may be required*

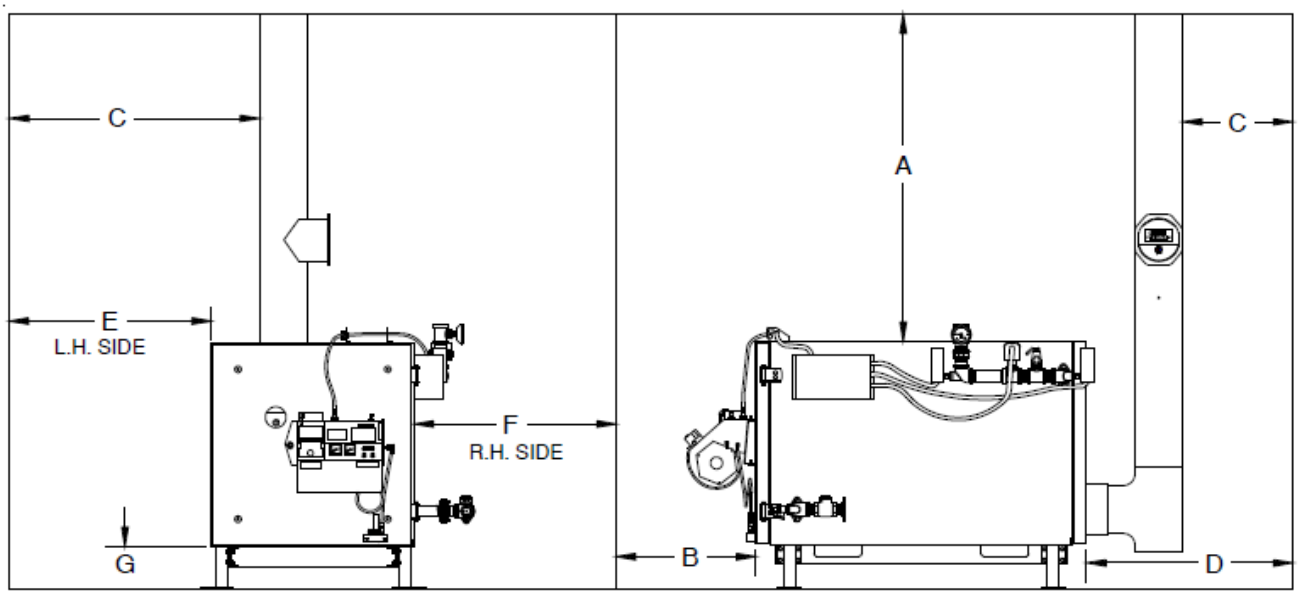

Figure 2A - Single Boiler Minimum Installation Clearances

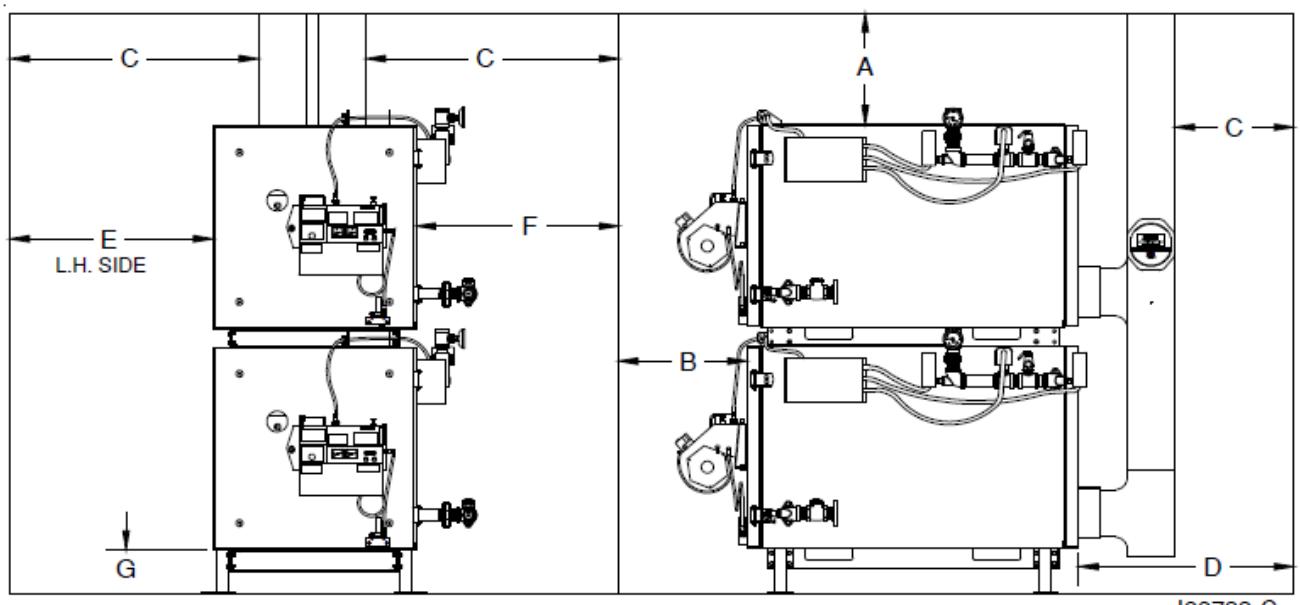

Figure 2B - Dual-Stacked Boilers Minimum Installation Clearances

SECTION 3: COIL TUBE BOILER ASSEMBLY

Understanding Assembly

Assembling your Clean Burn Coil Tube Boiler (CTB) is a multi-step process. Note that some assembly procedures apply only to certain CTB installations or configurations (i.e., single model or dual-stacked boilers). The assembly procedures are outlined below as they appear in this section. Clean Burn recommends that you review all assembly procedures before proceeding, paying careful attention to safety information statements.

Be sure to refer to the appropriate instructions for your CTB configuration.

Single Boiler Assembly Only

- Installing the CTB on the Support Stand

Dual-Stacked Boiler Assembly Only

- Assembling the Dual-Stacked Boiler

Assembly For All Boilers

- Connecting the CTB
- Installing the Ceramic Sleeve
- Checking the Burner Nozzle and Electrodes
- Installing the Connector Block on the CTB Door
- Installing the Oil Line Tubing
- Installing the Air Line Tubing
- Locking the Burner into Firing Position

Single Boiler Assembly

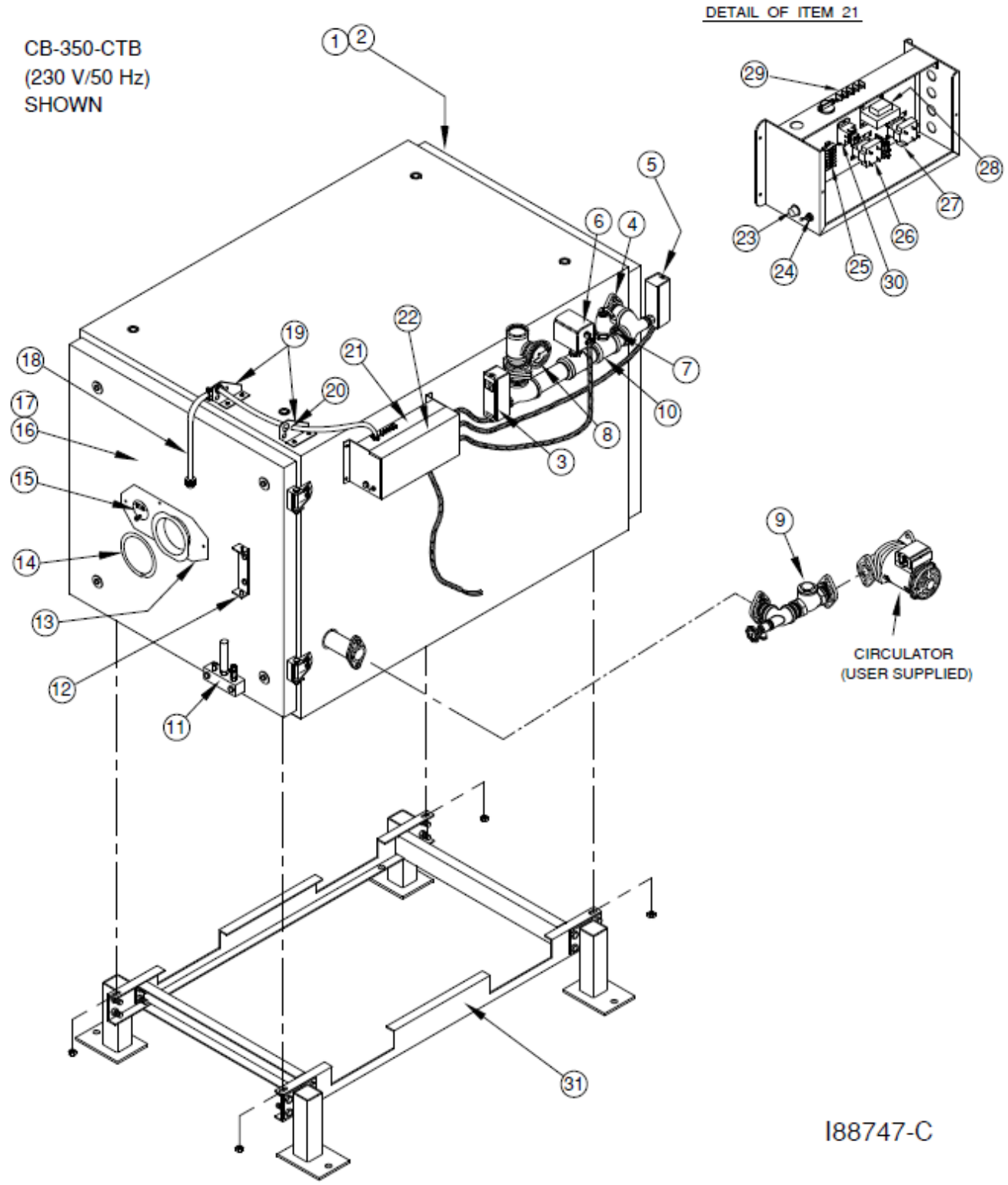

Figure 3A – Single Boiler Assembly Component Detail

CB-350-CTB-INT PARTS LIST

NUMBER	QTY	PART #	DESCRIPTION
31	1	90188	BASE
30	1	33529	COIL RELAY 240 VAC 30 A
29	1	33331	TERMINAL BLOCK
28	1	33340	TRANSFORMER 230V-24V
27	1	33328	RELAY DPDT
26	1	33352	RELAY DELAY
25	1	33486	TERMINAL BLOCK ASSEMBLY
24	1	33286	SWITCH DPDT
23	1	33338	AMBER LIGHT
22	1	27058	CONTROL BOX LID
21	1	12240	CONTROL BOX
20	1	33105	SNAP IN BUSHING
19	2	27158	L-BRACKET
18	1	33534	CONNECTOR CORD
17	1	31176	INSULATION – DOOR
16	1	11405	DOOR W.A.
15	1	21077	PORT LID
14	1	14084	ROPE GASKET
13	1	11583	BURNER MOUNT W.A.
12	1	11582	HINGE BRACKET W.A.
11	1	13141	ACCUMULATOR BLOCK ASSEMBLY
10	1	14272	UPPER PIPE ASSEMBLY
9	1	14293	CHECK VALVE AND PIPE ASSEMBLY
8	1	33330	GUAGE BOILER TEMP/PRESS
7	1	35048	RELIEF VALVE 3/4" MALE
6	1	35123	FLOW SWITCH TACO
5	1	28149	HIGH TEMP CUT-OFF
4	1	35079	COIL FLANGE 1-1/4"
3	1	28150	AQUASTAT
2	1	31166	INSULATION PANEL
1	1	11380	PANEL 350 REAR W.A.

PARTS THAT DIFFER ON CB-200-CTB

NO	QTY	PART #	DESCRIPTION
31	1	90200	BASE
17	1	31216	INSULATION 200 DOOR
16	1	11540	DOOR W.A.
10	1	14307	UPPER PIPE ASSEMBLY
9	1	14298	CHECK VALVE AND PIPE ASSY
4	1	35116	COIL FLANGE 1" NPT
2	1	31215	INSULATION PANEL
1	1	11539	PANEL 200 REAR W.A.

PARTS THAT DIFFER ON CB-500-CTB

NO	QTY	PART #	DESCRIPTION
31	1	90206	BASE
17	1	31240	INSULATION 500 DOOR
16	1	11564	DOOR W.A.
10	1	14315	UPPER PIPE ASSEMBLY
9	1	14314	CHECK VALVE AND PIPE ASSY
4	1	35121	COIL FLANGE 1 ½" NPT
2	1	31239	INSULATION PANEL
1	1	11563	PANEL 500 REAR W.A.

	200-CTB	350-CTB	500-CTB
Refractory Cylinder	21120	21140	21174
Refractory Cylinder Stand	27155	27190	27200

Single Boiler Assembly

Installing the CTB on the Support Stand

WARNING: Use extreme caution when moving and lifting the CTB (with a forklift) into place on the support stand. One CTB can weigh up to 907 kg (2000 pounds). Clean Burn recommends placing safety blocking underneath the unit until it is properly installed and secured on the support stand. ***Failure to follow these basic safety guidelines may result in serious personal injury and/or damage to the unit.***

1. Refer to Figure 3A to become familiar with the components required for CTB assembly.
2. Assemble the CTB support stand as shown in Figure 3B, using the hardware provided.
3. Move the support stand into the approximate position where the CTB is to be installed, and place blocks (approximately 25 cm /10 inches high) inside the stand to provide safety support for the boiler.
4. Use a forklift to carefully lift the CTB into position over top of the support stand.

WARNING: Secure the boiler to the forklift prior to lifting to prevent possible equipment damage or personal injury.

5. Lower the boiler down onto the safety blocks positioned inside the support stand.
6. Insert bolts (provided) into the keyhole slots in the boiler, and then lift the stand in position against the bottom of the boiler.
7. Tighten the bolts to firmly attach the stand to the bottom of the boiler.
8. Carefully lift the assembled boiler (with stand) off the safety blocks and move the unit into place.
9. Proceed with the remainder of boiler assembly procedures marked for **ALL CTB Models.**

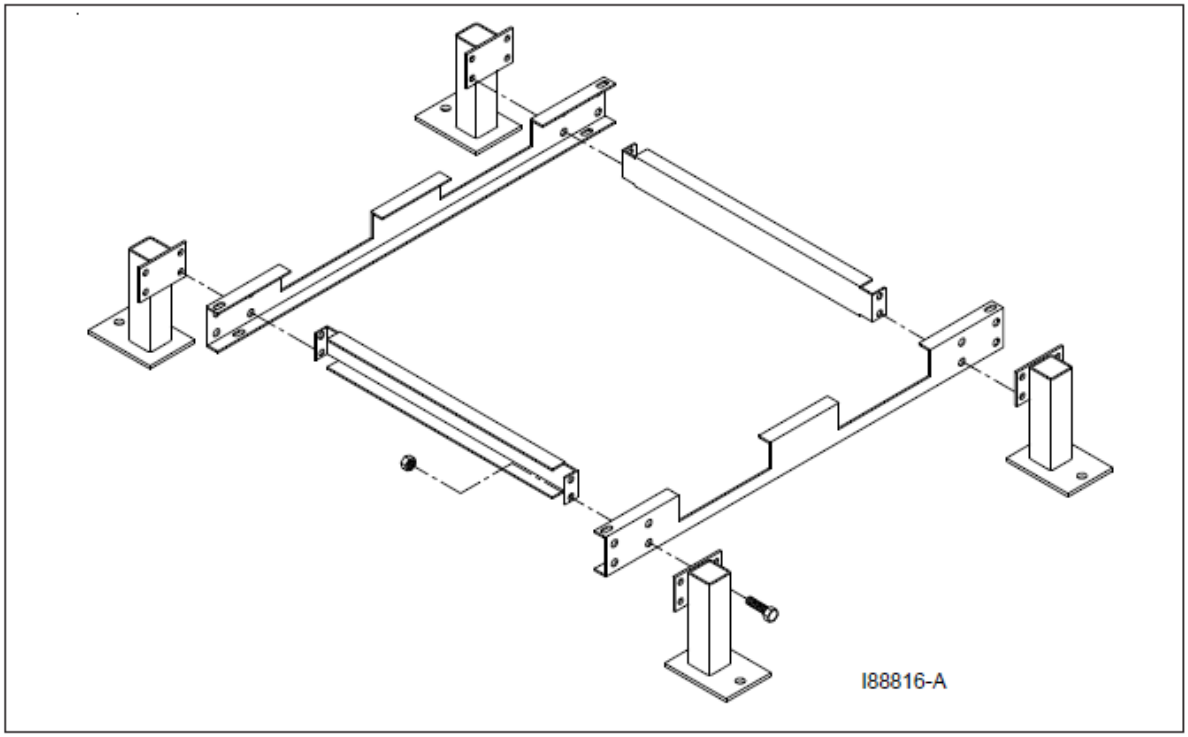

Figure 3B – Assembling the Support Stand

Dual-Stacked Boiler Assembly

Assembling the Dual-Stacked Boiler

WARNING: Use extreme caution when moving and lifting the CTB (with a forklift) into place on the support stand. One CTB can weigh up to 907 kg (2000 pounds). Clean Burn recommends placing safety blocking underneath the unit until it is properly installed and secured on the support stand. ***Failure to follow these basic safety guidelines may result in serious personal injury and/or damage to the unit.***

1. Refer to Figures 3C and 3D. Move the support stand into the approximate position where the dual-stacked boiler is to be installed, and place blocks (approximately 10 inches high) inside the stand to provide safety support for the boiler.
   NOTE: If the support stand has not been assembled, refer to Figure 3B.
   NOTE: Only use 19 cm (7 1/2") legs when stacking the boilers. Taller legs may be unstable.
2. Use a forklift to carefully lift one CTB into position over top of the support stand.

   WARNING: Secure the boiler to the forklift prior to lifting to prevent possible equipment damage or personal injury.

3. Lower the boiler down onto the safety blocks positioned inside the support stand.
4. Insert bolts (provided) into the keyhole slots in the boiler, and then lift the stand in position against the bottom of the boiler.
5. Tighten the bolts to firmly attach the stand to the bottom of the boiler.
6. Carefully lift the assembled boiler (with stand) off the safety blocks and move the unit into place for the rest of assembly.
   NOTE: This boiler will be referred to as the "bottom" boiler for the remainder of this procedure.

(Procedure continued on page 3-6)

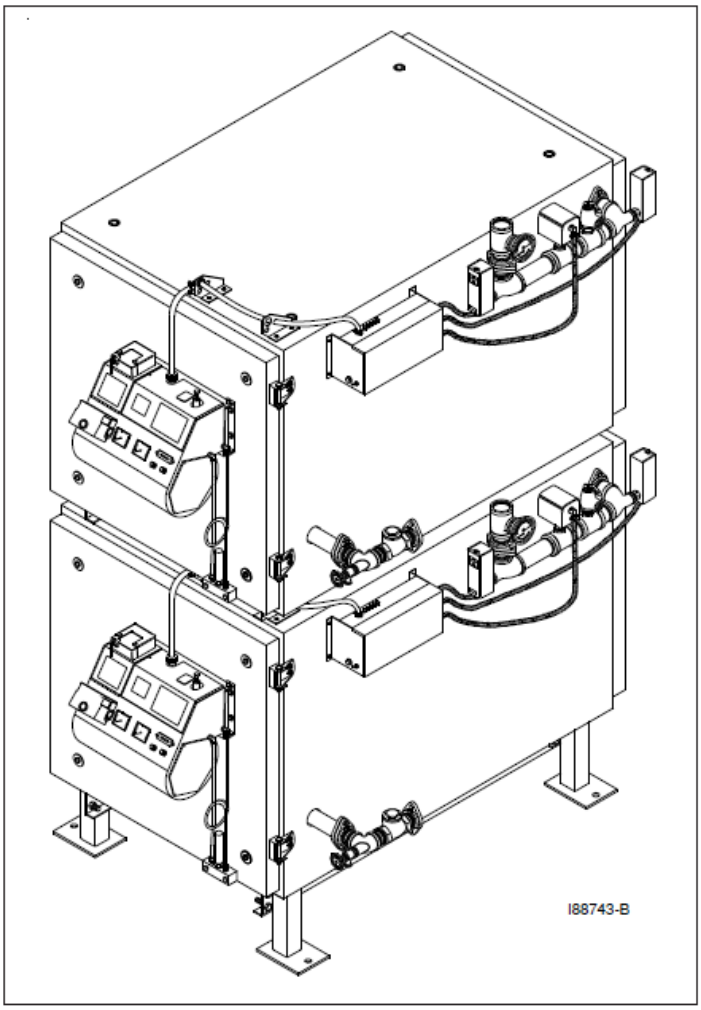

Figure 3C – Dual-Stacked Boilers (Completely Assembled)

Dual-Stacked Boiler Assembly

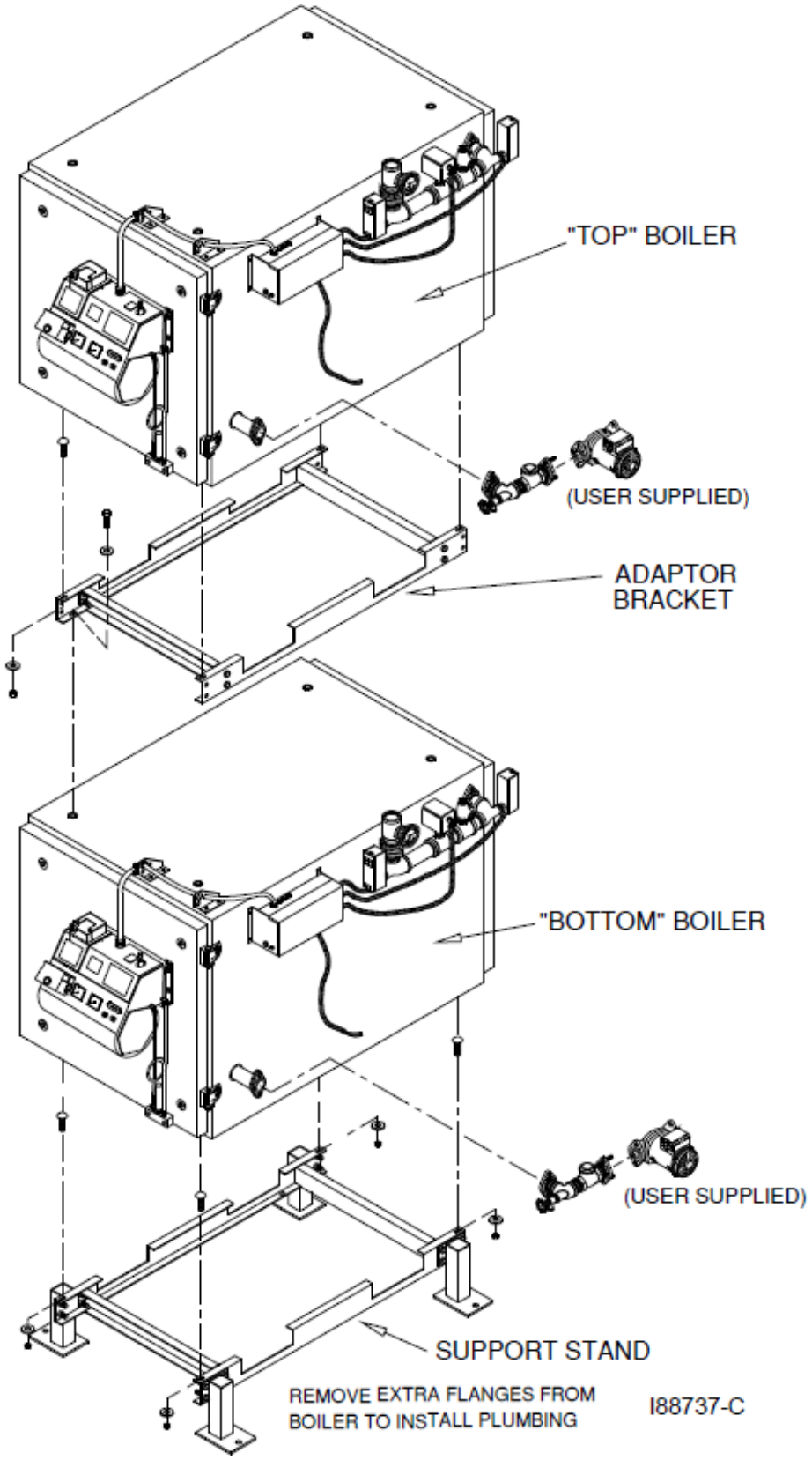

Figure 3D – Dual-Stacked Boiler Assembly Detail

Dual-Stacked Boiler Assembly

Assembling the Dual-Stacked Boiler (continued)

7. Refer to Figures 3D and 3E. Assemble the adaptor bracket using the 1" x 3/8" bolts provided. **NOTE:** The adaptor bracket is installed between the two boilers; it is fastened to the underside of the "top" boiler unit.
8. If you have not already done so, remove the pre-assembled hardware from the top of the "bottom" boiler. You will use this hardware to fasten the adaptor bracket.
9. Use a forklift to carefully lift the "top" boiler unit from underneath *(see safety warning at the beginning of this procedure).*
10. Attach the adaptor bracket to the bottom of the boiler using the 1" x 3/8" carriage bolts provided. DO NOT completely tighten the bolts until the two units are assembled together.
    NOTE: The notches on the adaptor bracket are designed to fit around standard forklift forks.
11. After the bracket has been attached to the underside of the "top" boiler unit, move the "top" unit into position over the "bottom" unit.
12. Carefully lower the "top" boiler down onto the "bottom" boiler, watching for alignment of the bracket holes and the holes in the top of the boiler below.
13. Install the hardware through the lower set of holes in the adaptor bracket into the top of the “bottom" boiler while checking for proper alignment of the two units. Ensure that ALL hardware is securely tightened.

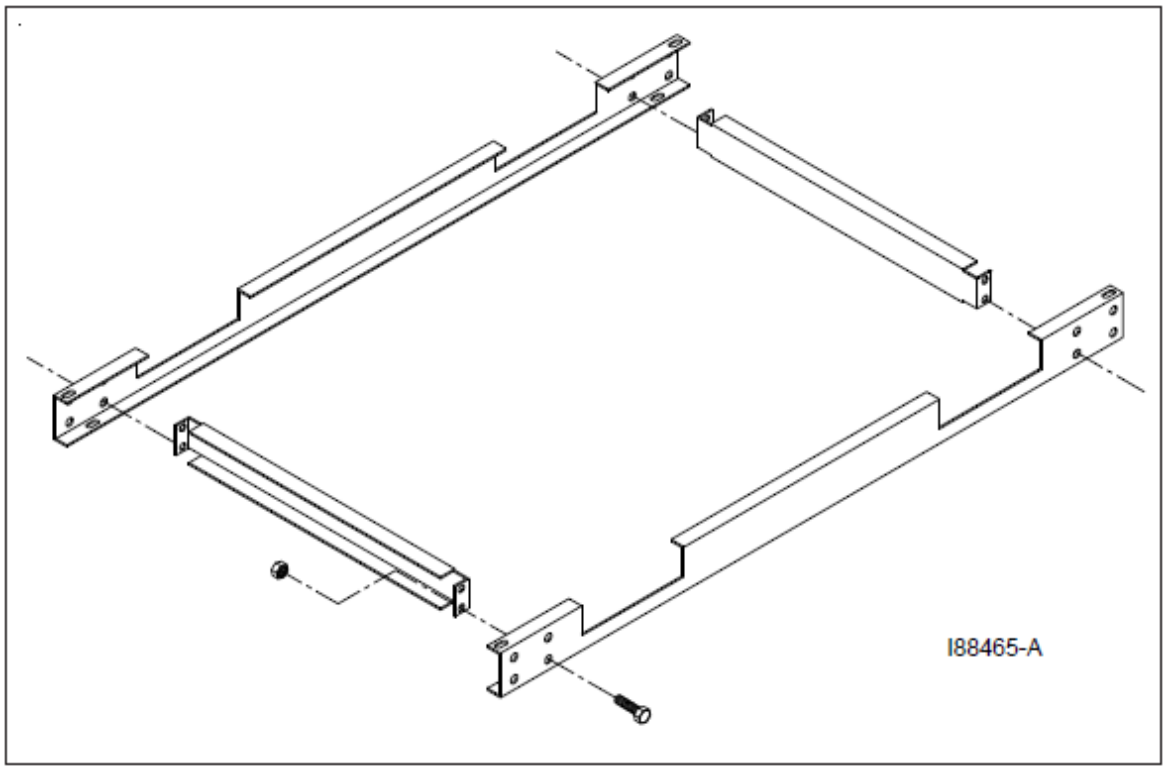

Figure 3E – Dual-Stacked Boiler Adaptor Bracket

Assembly for ALL Boilers

Connecting the CTB

Refer to Figures 3A, 3C, and 3D. Connecting the boiler involves three activities:

- Supply Side Connections
- Return Side Connections
- Wiring

NOTE: If you are installing dual-stacked boilers, each boiler must be installed in the same manner according to the following guidelines for connections/wiring.

Supply Side Connections

- Install the temperature/pressure gauge into the first tee (the 1/2" tapping). Be sure to use pipe dope on the threads of the gauge. Tighten the gauge into the tee.
- All other components on the supply side are factory installed and pre-wired for operation.

Return Side Connections

Boiler circulator (user supplied)
NOTE: Installation instructions are provided for both required and optional components.

- Mount the boiler circulator *(user supplied)* onto the flanged check valve assembly mounted on the boiler. Place a gasket between the two flanges and tighten.
- Install the return piping assembly onto the other side of the circulator flange. Place a gasket between the two flanges and tighten.

Wiring

- For *each* boiler, connect the wire from the CTB control box to the circulator. Refer to the CTB wiring diagram in Appendix B as needed. If necessary, excess length may be trimmed from the circulator wires.

Assembly for ALL Boilers

Installing the Ceramic Sleeve in the Boiler

NOTE: The ceramic target is factory-installed.

1. Refer to Figures 3F and 3G.
2. Swing open the clean-out door on the CTB front to gain access to the combustion chamber.
3. Install the stand for the ceramic sleeve as detailed in Figure 3F. Position the stand on the coils approximately 3" in from the door opening.
4. After the ceramic sleeve has been installed and positioned properly, close the clean-out door.
5. Tighten the four (4) nuts and washers in a crisscross pattern until all are snug.

NOTE: The ceramic sleeve needs to seat firmly against the door insulation for proper combustion. Carefully position the ceramic sleeve on the stand so that it extends out slightly beyond the door opening, so that the door will push the ceramic sleeve in place as it is closed.

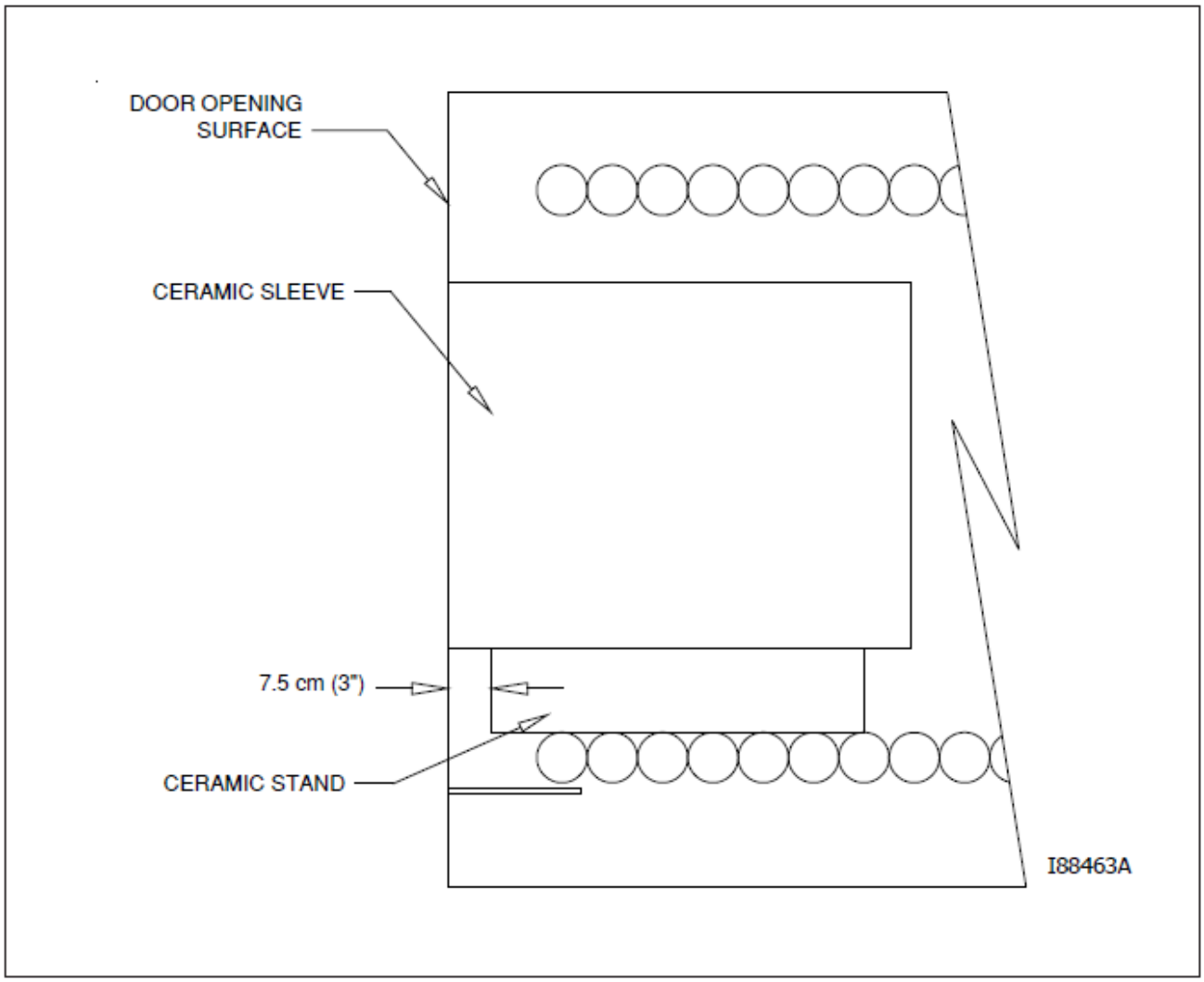

Figure 3F – Positioning of the Ceramic Stand and Ceramic Sleeve

Assembly for ALL Boilers

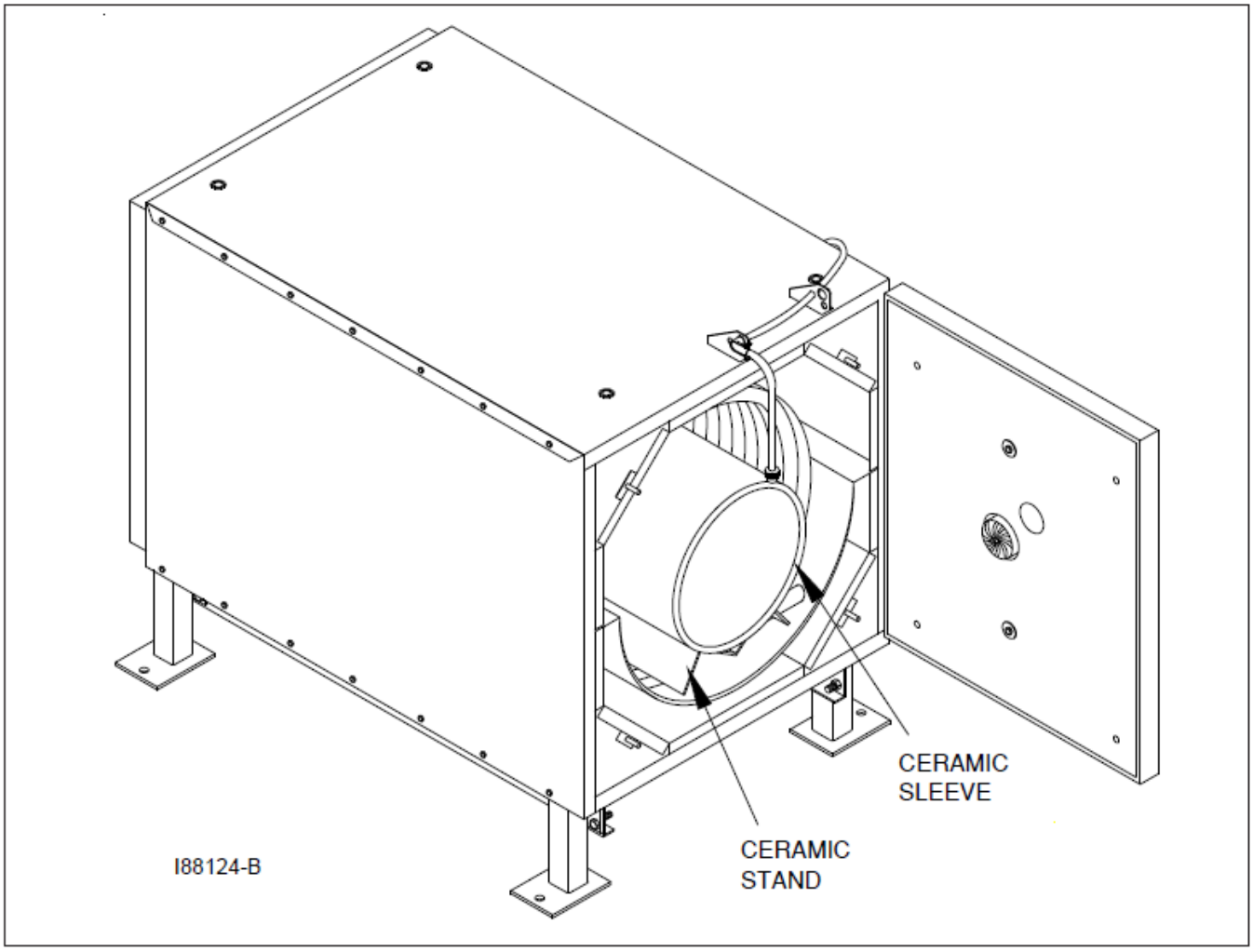

Figure 3G – Ceramic Stand and Sleeve Installed in the Combustion Chamber

Assembly for ALL Boilers

Checking the Burner Nozzle and Electrodes

NOTE: The burner nozzle is factory installed. Model CB-200-CTB-INT and CB-350-CTB-INT use a Delavan 9-5 nozzle. Model CB-500-CTB-INT uses a Delavan 9-28 nozzle. The nozzle size is indicated on the nozzle head as shown in Figure 3H. Refer also to **Appendix A** at the back of the manual for additional specifications on the burner nozzle.

ATTENTION: Check the electrode settings as specified in Figure 3H. The electrode settings must be correct for your burner to operate properly.

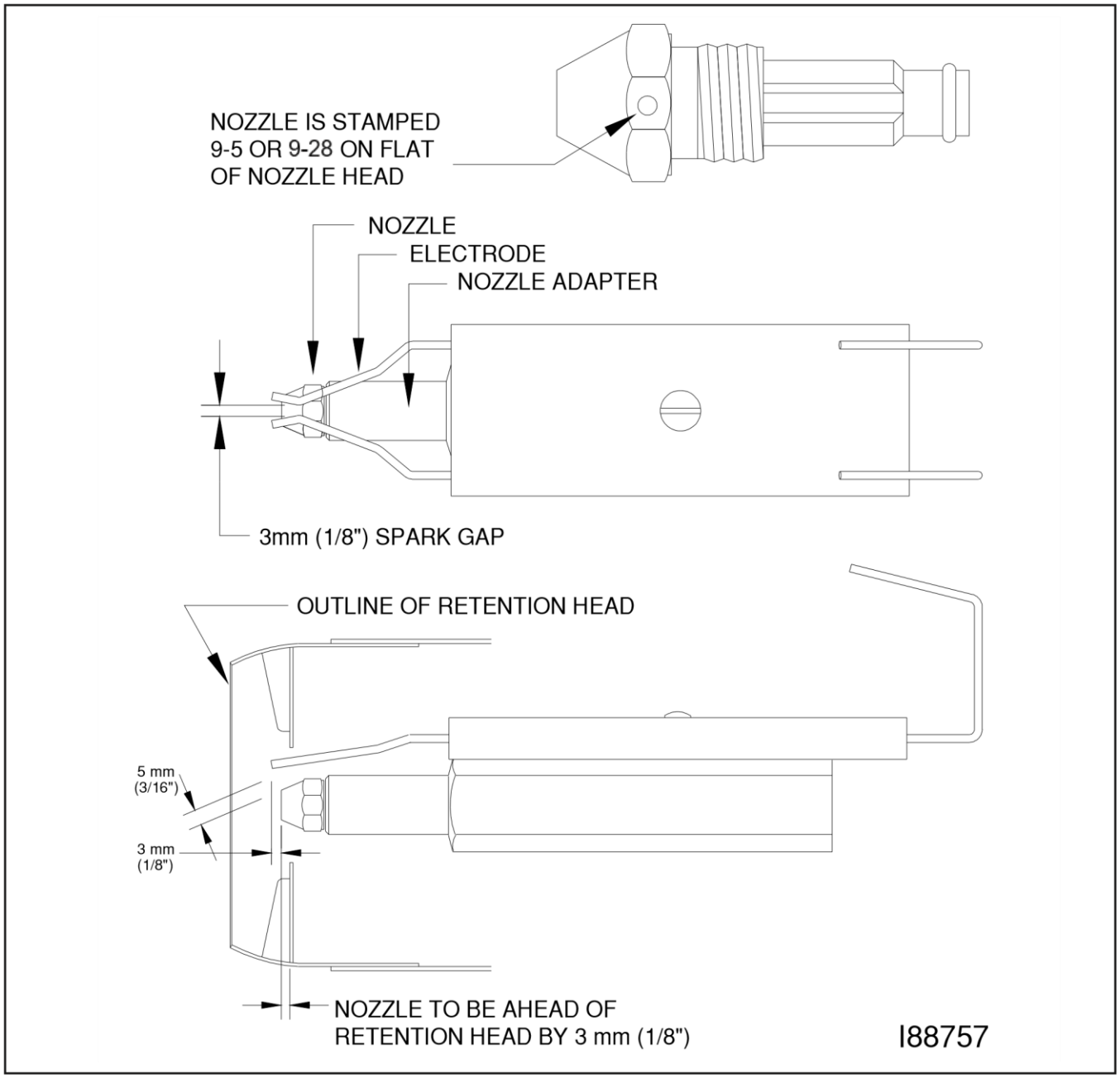

Figure 3H - Burner Nozzle and Electrode Specifications

Assembly for ALL Boilers

Mounting the Burner on the Hinge Bracket

NOTE: The burner may have been mounted on the CTB at the factory. If this is the case, simply check the clearance between the retention head and the boiler to make sure the burner swings freely into firing position. If adjustments are necessary, follow the procedure below to adjust the hinge bracket bolts.

1. Remove the nut from the mounting flange of the boiler cabinet and set it aside for later use.
2. Lift the burner into position and mount it on the hinge bracket on the boiler cabinet.
3. Carefully swing the burner and check the clearance between the retention head and the boiler throat.
4. Check the clearance between the retention head and the boiler throat. *There must be at least 3 mm (1/8") clearance, so the retention head is not "bumped" as you swing the burner into firing position.*

NOTE: If the retention head "bumps" the CTB throat, adjust the hinge bracket bolts as follows:

- While supporting the burner, slightly loosen the two (2) hinge bracket bolts.
- Carefully re-position the burner so it swings freely into its firing position.
- With the burner in its firing position, re-tighten the hinge bracket bolts.

Installing the Connector Block on the CTB Door

1. Refer to Figure 3I on the next page.
2. Use the two (2) bolts to install the aluminum connector block onto the CTB cabinet.
3. Remove and discard the red caps and plugs from the fittings and ports on the connector block. DO NOT allow any dirt/debris to enter these components during assembly.

ATTENTION: The connector block includes an accumulator. The accumulator functions like a shock absorber on the oil line to prevent pressure buildup and protect vital burner components. It is important that the connector block is installed as shown so that the accumulator is in a vertical position to prevent sediment from settling in the accumulator. ***Never operate your CTB without the connector block and accumulator properly installed, or damage may occur to vital burner components.***

ATTENTION: DO NOT use Teflon tape on any fittings, as it will plug vital burner components.

Assembly for ALL Boilers

Installing the Oil Line Tubing

NOTE: DO NOT disassemble the compression fitting from the swivel fitting. To prevent leaks, the NPT threads of the compression fitting have been sealed with hydraulic sealant during assembly of the fittings at the factory.

1. Remove and discard the red caps from the oil line tubing.
2. Loosely install the oil line tubing into the oil line fitting on the burner.
3. Use a wrench to slightly rotate the oil line fitting on the burner counterclockwise so the tubing lines up with the swivel assembly. Slightly bend the tubing as shown in Figure 3I, if required, to "line up" the oil line.
4. If necessary, use a tubing cutter to cut the tubing to the proper length.
   ATTENTION: Due to adjustment of the burner hinge bracket, the oil line tubing may need to be cut to fit properly. DO NOT lift up on the burner when installing the oil line tubing to compensate for oil line tubing that is too long. This will place the weight of the burner on the swivel fitting and result in leaks at the swivel fitting seal.
5. Make sure that the curl in the oil line is positioned as shown in Figure 3I, so that the burner can swing open correctly.
6. Install the oil line tubing and tighten the nuts on the compression fittings. DO NOT overtighten these fittings to avoid damaging the ferrules.

NOTE: You may also check the positioning of the oil line according to Figure 3J, which provides a larger front view of the connector block assembly.

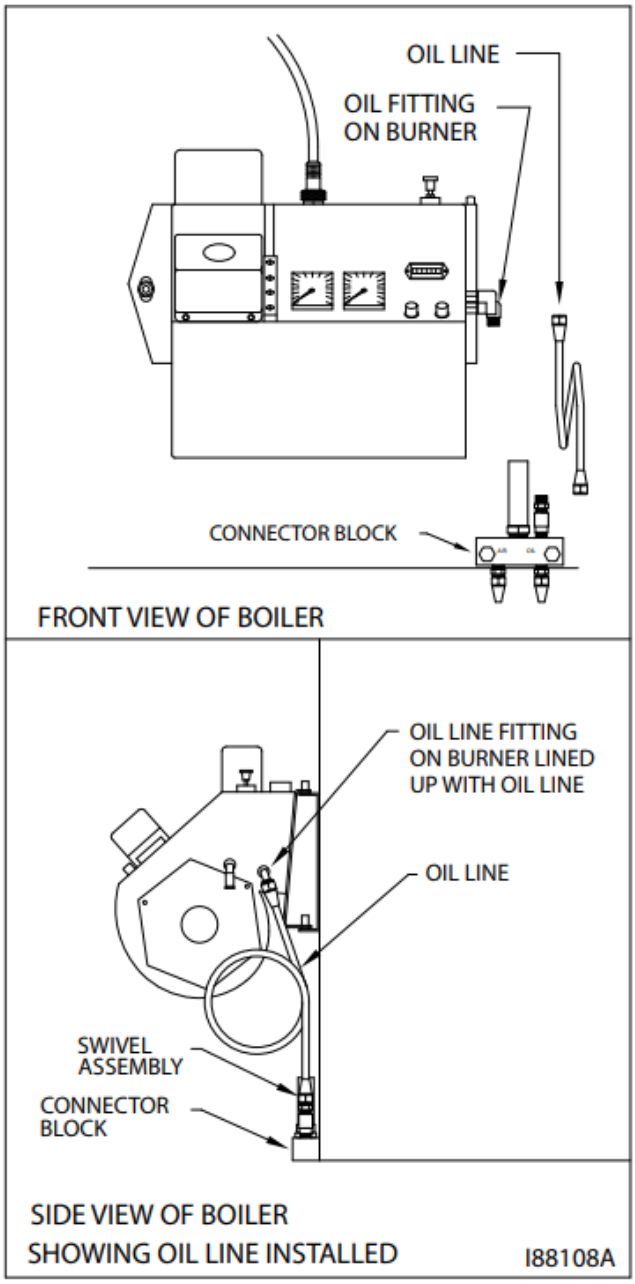

Figure 3I – Installation of Connector Block and Oil Line

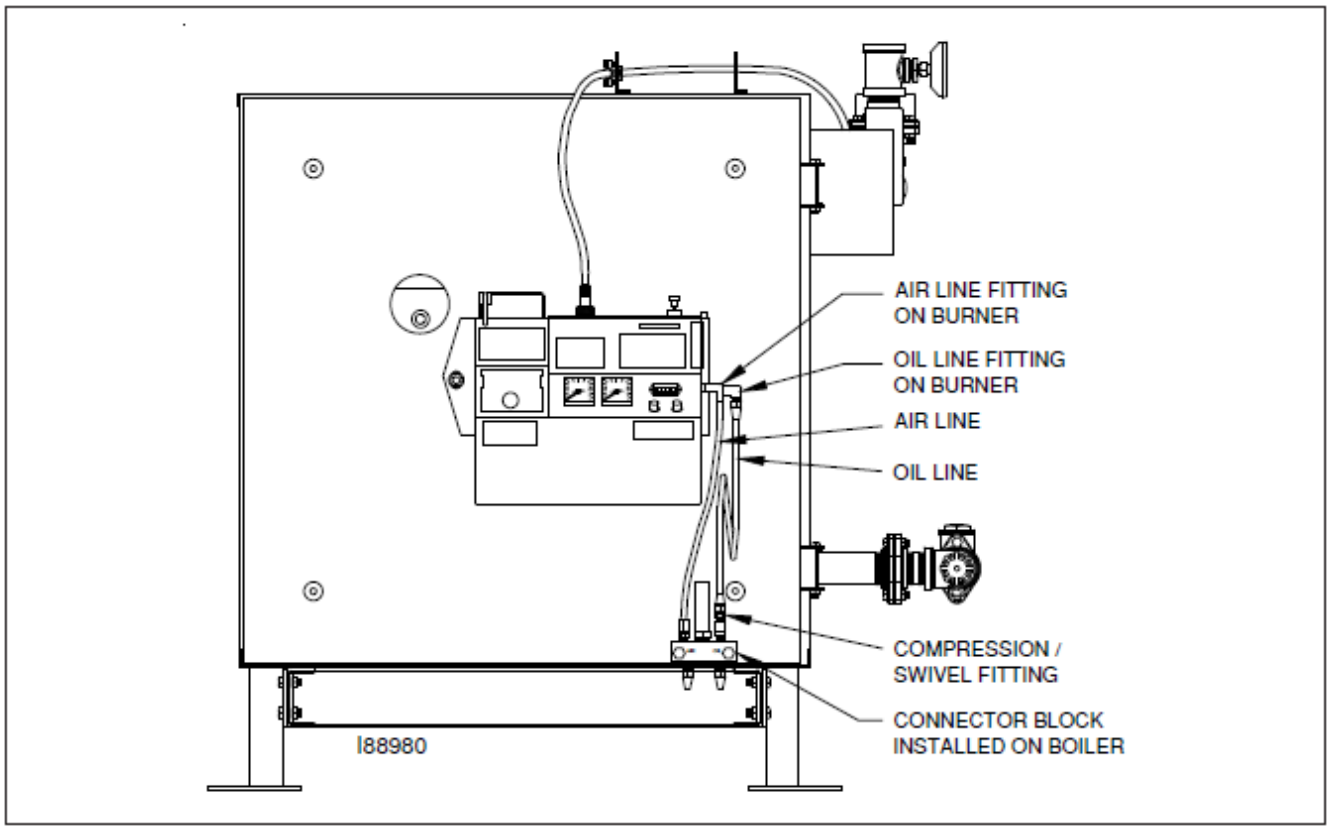

Figure 3J - Installation of Connector Block, Oil Line, and Air Line (Front View)

Installing the Air Line Tubing

1. Remove and discard the red caps from the air line tubing.
2. Refer to Figure 3J. Push the air line tubing into the fitting on the connector block until the tubing bottoms out in the fitting.
3. Repeat this procedure to connect the air line tubing to the air line fitting on the side of the burner.

Locking the Burner into Firing Position

1. Swing the burner into firing position.
2. Install and tighten the lock-down nut on the mounting plate bolt to secure the burner in its firing position.
3. Plug the burner electrical cable into the receptacle on the top of the burner housing.
4. Tighten the locking ring to secure the electrical cable.

NOTE: Be sure to properly align the plug when plugging it into the receptacle. See Fig 3K.

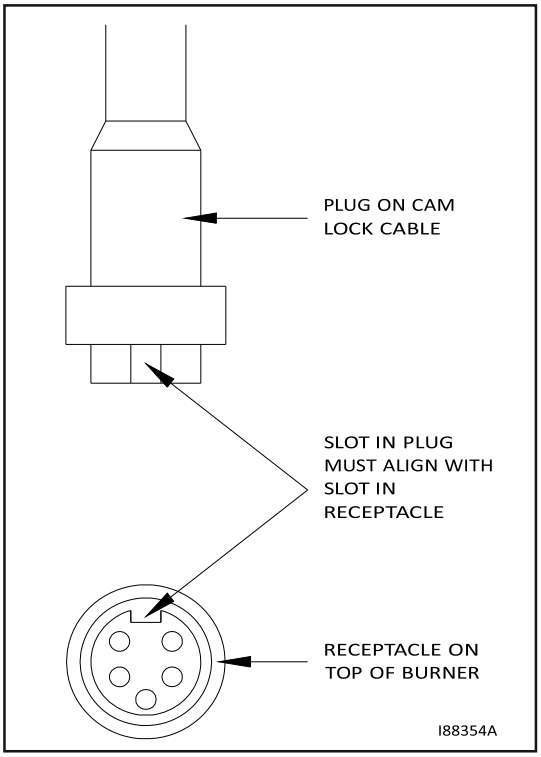

Figure 3K - Detail of Burner Electric Receptacle

SECTION 4: COIL TUBE BOILER INSTALLATION

Understanding Installation

Installing your Clean Burn Coil Tube Boiler (CTB) is a multi-step process which includes:

(1) Oil Tank Installation Specifications (review)
(2) Installing the Metering Pump*
(3) Connecting Water to the CTB
(4) Installing the Oil Lines
(5) Installing the Compressed Air Line
(6) Wiring the CTB and Pump
(7) Installing the Stack
(8) Inspecting the Installation

NOTE**: This manual provides information for the installation of a metering pump with the CTB. If you ordered a J-pump, please also refer to the separate ***J-Pump Installation Manual included with your shipment.

Clean Burn recommends that you review all procedures before beginning installation, paying careful attention to safety information statements. **Figures 4A/4B provide a general overview of a typical CTB installation and should be reviewed closely before proceeding.**

WARNING: Improper installation can adversely affect the proper, safe operation of your CTB. It is critical that your boiler installer reads and follows the instructions provided in this manual. Access to the boiler must be restricted. Only trained, qualified personnel should be permitted to perform installation and operation procedures.

WARNING: To prevent damage to the CTB and to ensure personal safety, lifting and moving the CTB must be performed in accordance with safe handling procedures.

Important Safety Guidelines for Safe Installation

The installation of the appliance shall be in accordance with all applicable codes and regulations for the location where it is installed.

Important Notes to the Electrician

WARNING: Electrical installation of the boiler is to be performed only by qualified personnel (i.e., licensed electrician/engineer). Improper electrical installation can adversely affect the proper, safe operation of the boiler and may cause serious personal injury/death.

WARNING: Before completing any boiler wiring, refer to the wiring diagrams in Appendix B at the back of the manual. Carefully review the wiring assignments and colors, noting that the Clean Burn wire colors may not be "standard" or familiar.

WARNING: High earth leakage current / earth connection is essential and must be established before connecting the main power supply.

WARNING: Low voltage terminals are only protected by basic insulation--caution is required.

CAUTION: Use only approved wire conduit and connectors when wiring the Clean Burn boiler. An emergency stop device (i.e. "panic button") must be installed at ground level in the mains cable to the CTB to ensure the safety of CTB operators and service personnel. The external disconnect device must employ a contact separation of 3mm in all poles. The external breaker must be an approved type.

CAUTION: The main cable must be introduced into the control box using conduit connectors which provide adequate strain relief. The main cable installation must be accomplished using suitably rated and approved wiring (BASEC or HAR) of appropriate current-carrying capacity. The wires should have a minimum rating of 90ºC (194ºF).

NOTE: According to Clause 4A of 61000-3-11 (International Electrical Standard), the user must determine, in consultation with the supply authority, that the boiler is connected only to a supply with an impedance of $3.773 \times 10^{-3} + 2.358 \times 10^{-3}$ or less.

Typical Installation Diagrams

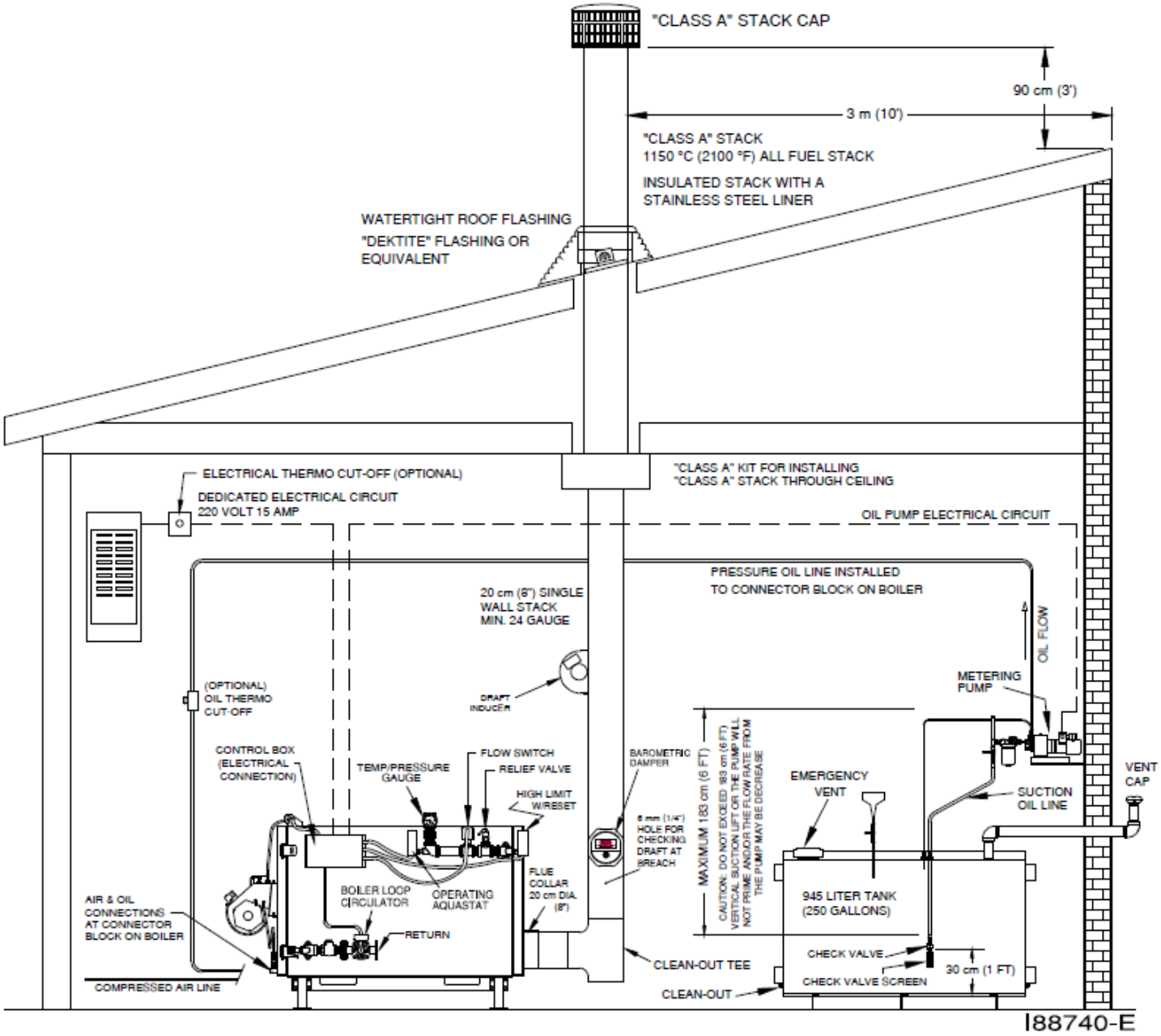

Figure 4A - Typical Single Boiler Installation Diagram

Typical Installation Diagrams (continued)

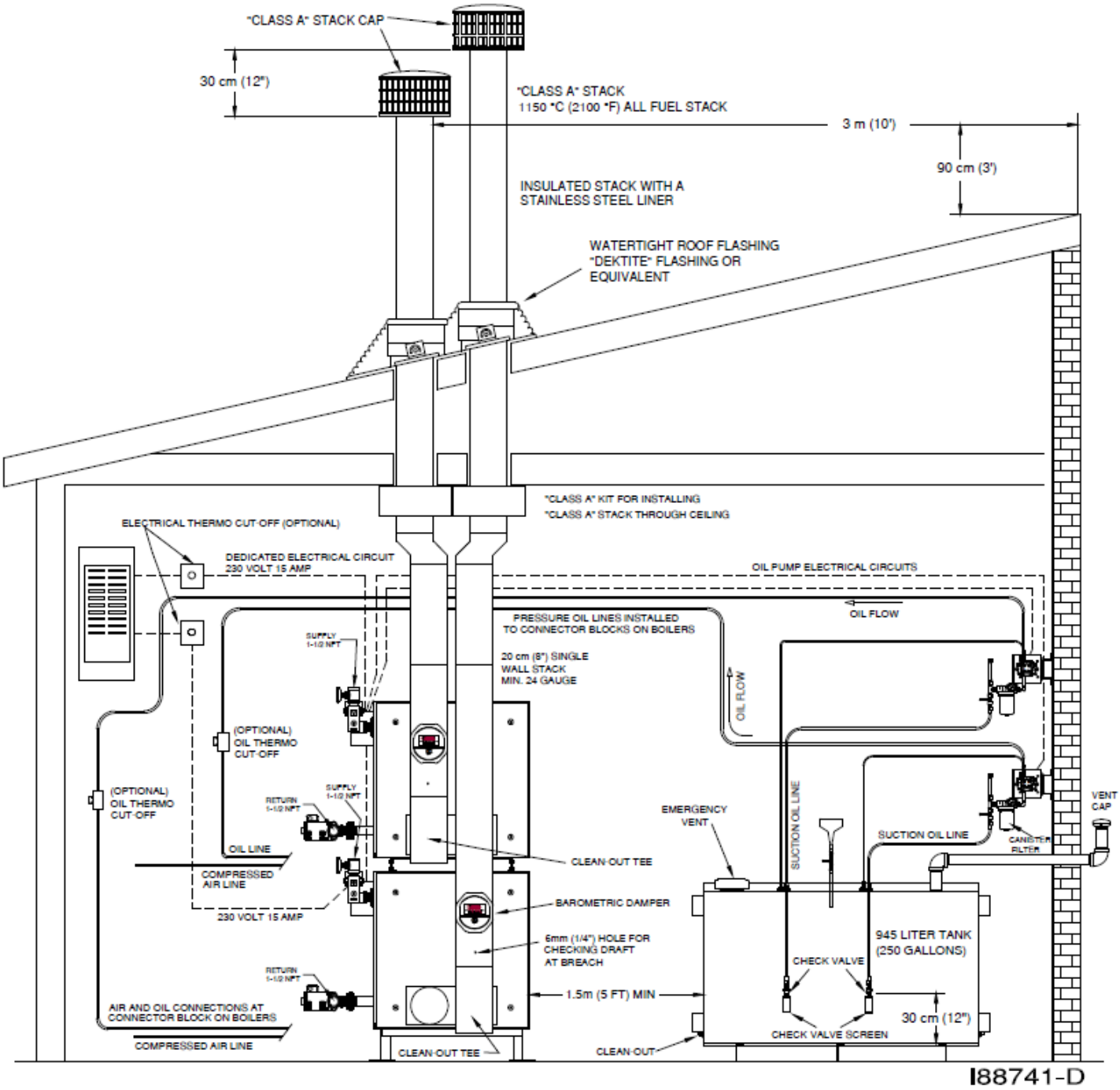

Figure 4B - Typical Dual-Stacked Boiler Installation Diagram
(Two CB-350-CTB Boilers Shown)

Combustion Air Requirements

The CTB system designer/installer must ensure that there is the proper amount of combustion air in the boiler/mechanical room.

Refer to Figure 4C.

Combustion Air is the required amount of air that the equipment needs to permit the satisfactory combustion of oil, the proper venting of combustion gases, and to maintain a safe ambient temperature within the space at safe limits under normal conditions of use.

The following requirements should be followed for proper supply of combustion air:

Units located in confined spaces (units in a boiler room/mechanical room) must have two (2) permanent openings, one near the top of the enclosure and one near the bottom of the enclosure as follows:

1. If all of the air is taken directly from the outside of the building by use of vertical ducts - each of the two openings must have a total free area of not less than 6.5 cm^2 (1 in^2) per 4,000 BTU/hr, or 225 cm^2 (35 in^2) per gallon of oil, of the total appliance(s) input rating.

2. If all of the air is taken directly from the outside of the building by use of horizontal ducts - each of the two openings must have a total free area of not less than 6.5 cm^2 (1 in^2) per 2,000 BTU/hr, or 450 cm^2 (70 in^2) per gallon of oil, of the total appliance(s) input rating.

3. If all of the air is taken directly from inside of the building - each of the two openings must have a total free area of not less than 6.5 cm^2 (1 in^2) per 1,000 BTU/hr, or 900 cm^2 (140 in^2) per gallon of oil, of the total appliances(s) input rating.

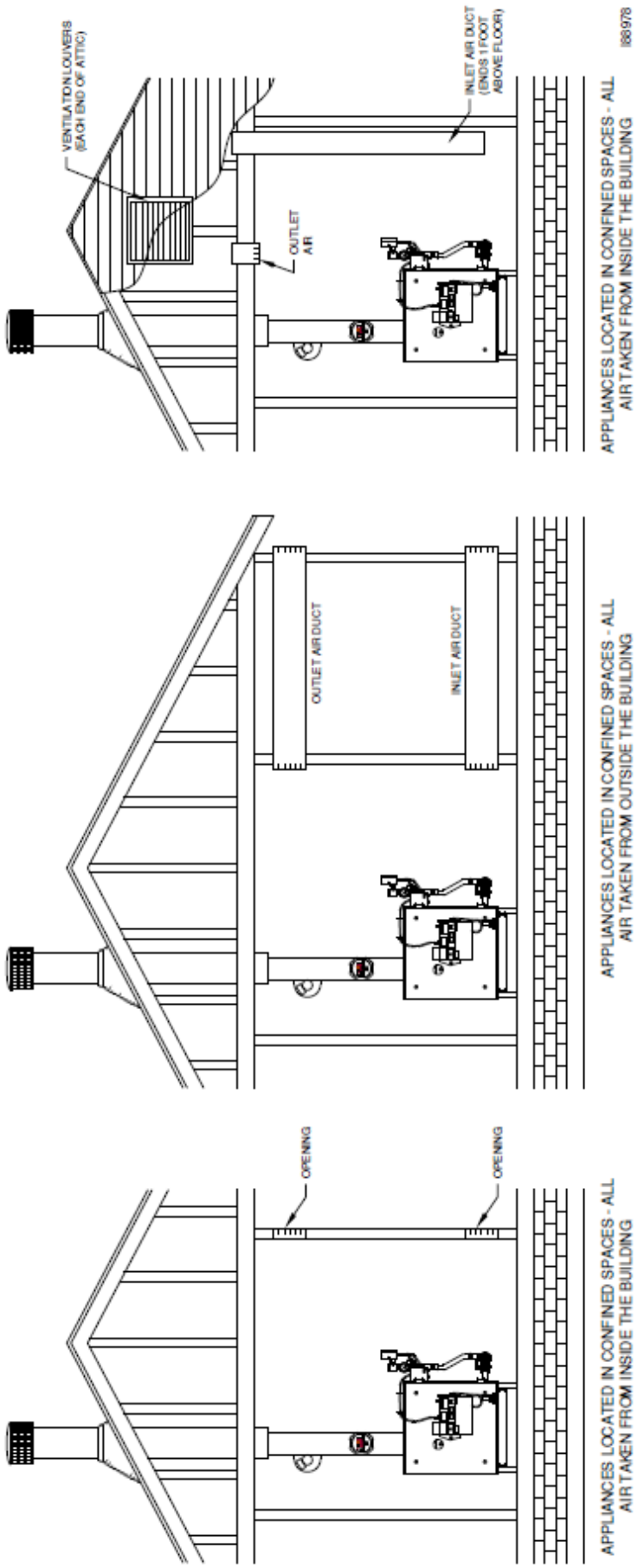

Figure 4C - Air for combustion and ventilation

Oil Tank Installation Specifications

Ensure that your tank installation adheres to the following safety guidelines as stated here and in **Section 1** of this manual.

The tank safety label (shown at right) also summarizes these important specifications for tank installation and usage. If you do not have a copy of this label, please contact your Clean Burn dealer for a copy, which is to be affixed directly to your used oil supply tank.

- **The tank installation must meet all national and local codes.** Consult your local municipal authorities for more information as necessary.
- Use a minimum **1000 Liter tank**. DO NOT use drums as a substitute for an appropriate tank. The tank must be large enough to allow water, sludge, etc. to settle out of the used oil.
- Single wall tanks should have a **manual shutoff type valve** on the side of the tank to allow the water, sludge, etc. to be drained from the bottom of the tank.
- All **unused openings in the tank must be plugged** or capped off.
- For optimal system functioning, Clean Burn Recommends inside tank installations as shown in Figures 4A and 4B.
- The tank must be **vented to the outside** of the building using iron or steel pipe and fittings with an approved vent cap.
- Carefully review the oil tank and pump installation details as shown in Figures 4A, 4B, and 4D, including the metering pump installation and specifications for the oil line installation. (Procedures for installing these components can be found in the following pages.)

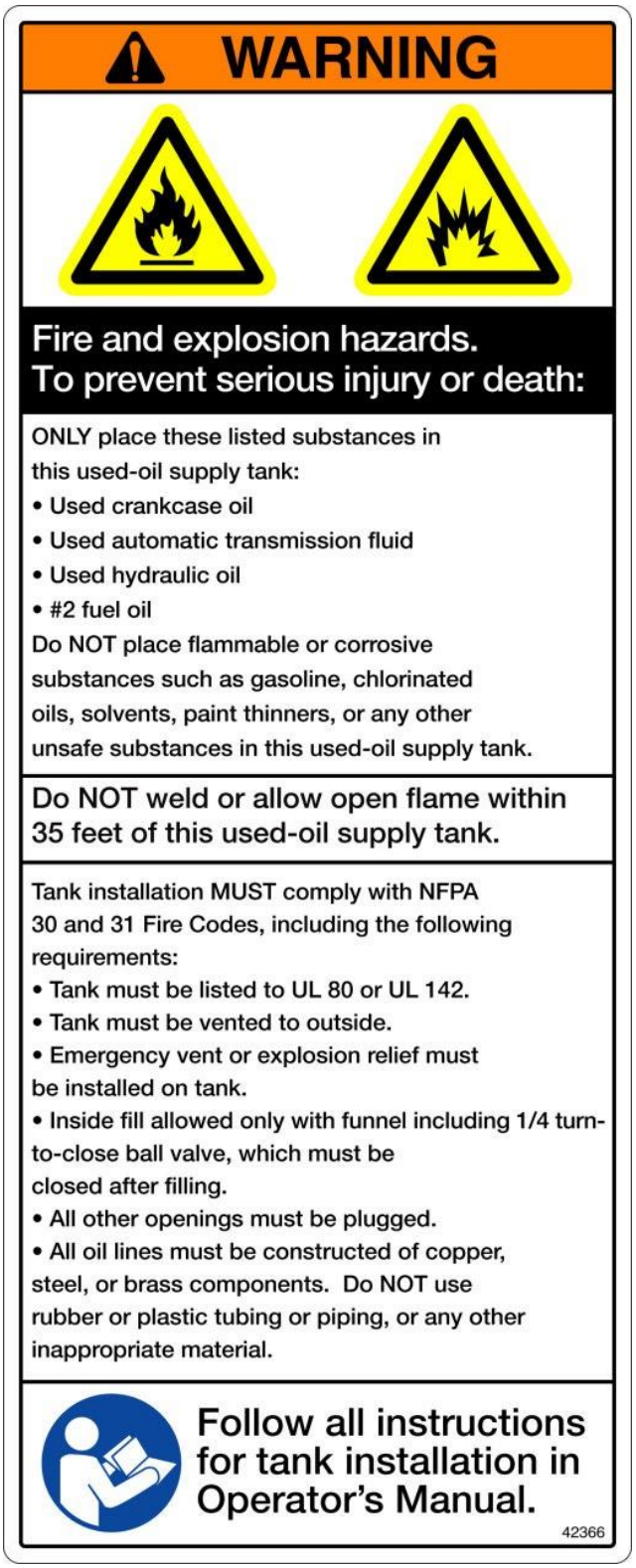

IMPORTANT NOTE: If you are installing an inside oil tank in the same room as the boiler, you must allow a 1.5 m (5 foot) minimum clearance between the tank and boiler. The oil tank should be set and installed in position BEFORE the boiler is installed.

Oil Tank Installation Specifications (continued)

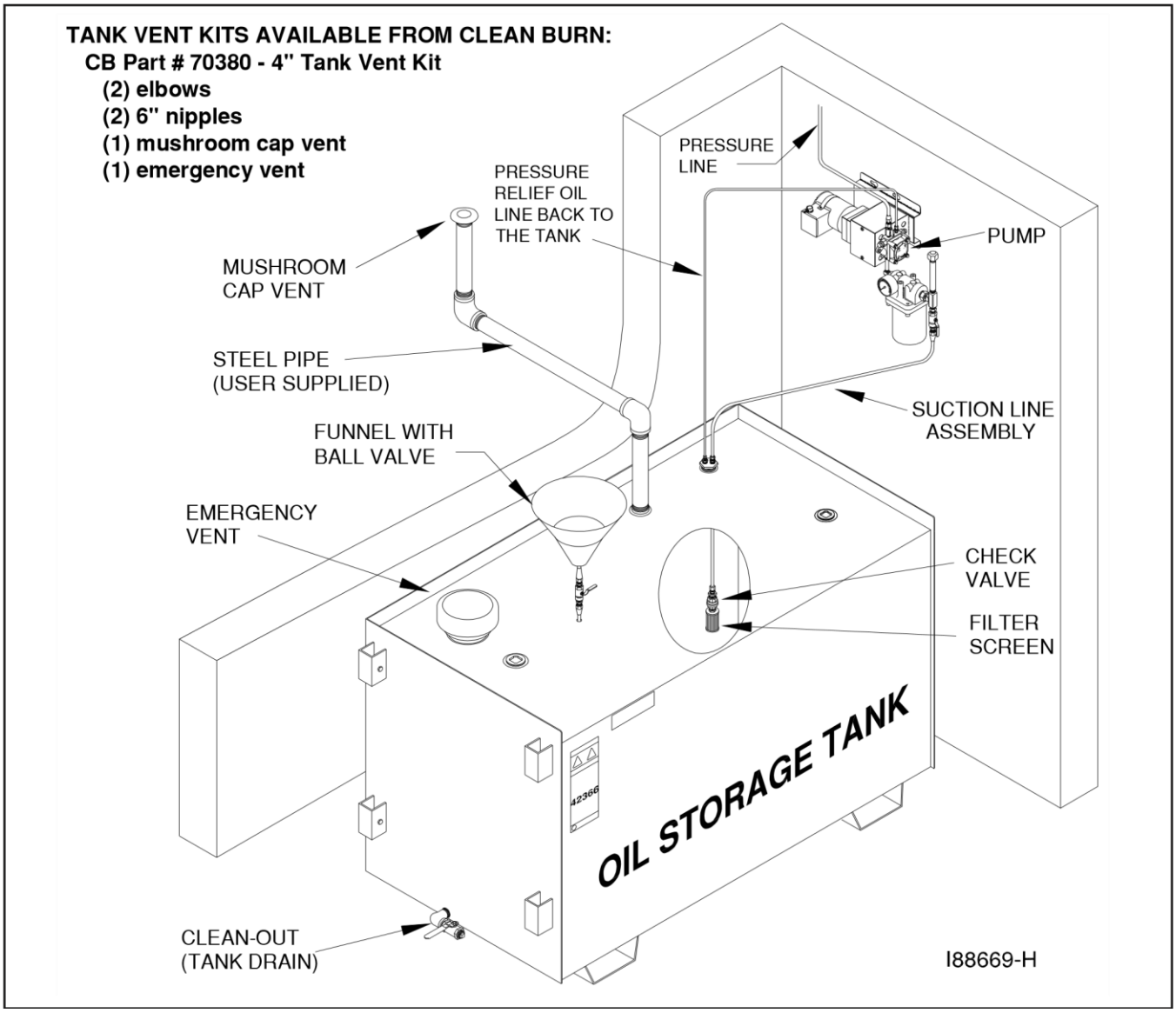

Figure 4D - Typical Metering Pump Installation with Inside Tank

Installing the Tank Vent and Emergency Vent

Codes require that you install a tank vent (to the outside) and an emergency vent for your tank as shown in Figure 4D. **Tank Vent Kits** are available from Clean Burn; contact your local Clean Burn dealer to order. Be sure to check your local codes for any additional tank installation requirements, and adhere to the following installation guidelines:

- Install a length of minimum 5 cm (2") steel pipe (user-supplied) terminating outside with a proper vent cap as shown in Figure 4D. Consult local codes for information and requirements concerning the proper venting of oil storage tanks.
- Install an emergency vent as shown in Figure 4D. Contact your tank manufacturer for information concerning the proper emergency vent for your tank.

Installing the Metering Pump

Preparing for Installation

Before starting installation of the metering pump, review Figures 4E, 4F, and 4G to become familiar with the metering pump components. You will also need to accomplish the following activities:

- Verify that you have the proper metering pump for your CTB (note the specific gear motor part numbers shown in Figure 4F).
- Gather all required tools and materials as needed for installation; as indicated in the following procedures, some materials (e.g. fittings, tubing) are to be user-supplied.
- *Standard mounting* is vertical mounting on a wall. **This pump installation is recommended.** *Alternate mounting* is horizontal mounting on a bracket. Be sure to carefully follow the appropriate procedures/diagrams for pump mounting.
- For optimal metering pump functioning, mount the pump at a distance from the oil tank that will comply with the following requirements:

  The suction oil line may NOT exceed **183 cm (6') TOTAL vertical lift AND 122 cm (4') TOTAL horizontal lift.**

Standard Mounting: Vertical Positioning

1. Refer to Figures 4E, 4F, and 4G. Note that the metering pump is shipped with the pump head already positioned for vertical wall mounting.
2. Use the appropriate type of bolts and washers (user-supplied) to securely mount the metering pump to the appropriate wall in your building at a distance from the tank that complies with the suction oil line requirements.

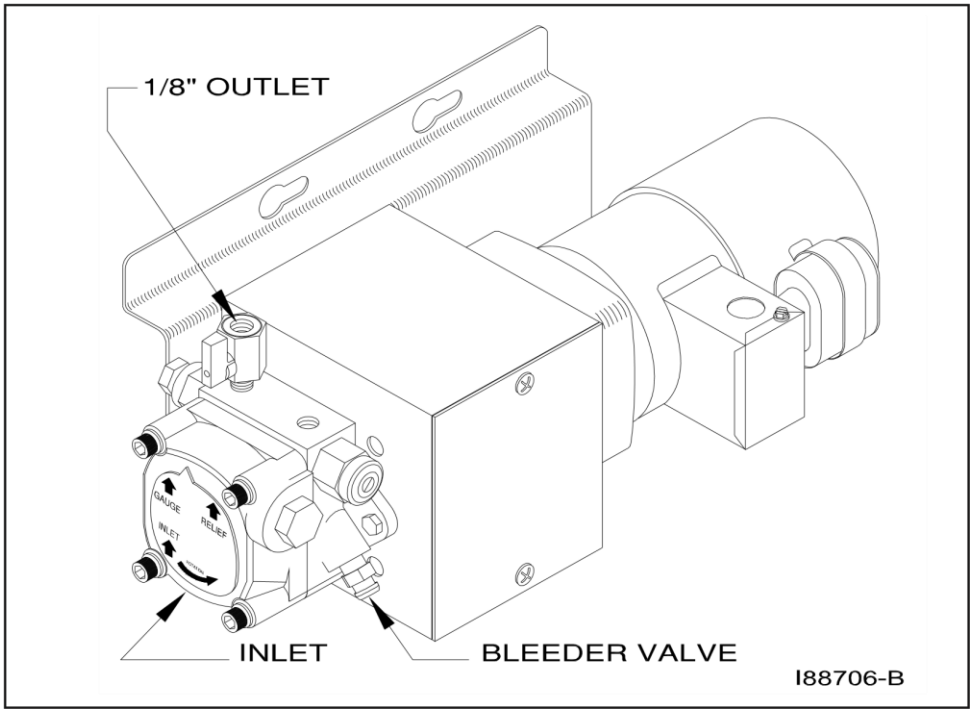

Figure 4E - Standard (Recommended) Vertical Mounting of the Metering Pump

#	PART #	DESCRIPTION
2	see chart	GEARMOTOR
3	11322	MOUNT - METER PUMP
4	32037	1/8 NPT X 1/4 TUBE COMPRESSION FITTING
5	N/A	1/4 COPPER OR ALUM. TUBING
6	32140	LONG NUT 1/2
7	N/A	1/2 COPPER OR ALUM. TUBING
8	32141	FLARED TUB. TO PIPE STRAIGHT 1/2 X 1/2NPT
9	32526	MINI BALL VALVE 1/8 MNPT X 1/8 FNPT
10	32475	METER PUMP
11	32467	1/4" X 3" NIPPLE
12	32210	1/4" STREET ELBOW
13	32336	1/4" X 3/4" BRASS BUSHING
14	32123	VACUUM GAUGE
15	32127	CANISTER FILTER- LENZ
16	32430	1/2" x 3/4" BUSHING, BRASS
17	32446	1/2" X 5" NIPPLE
18	32429	1/2" STREET TEE, BRASS
19	32137	1/2" HEX NIPPLE
20	32142	1/2" BALL VALVE
21	32062	1/4" NPT x 1/4" TUBING FITTING
22	32443	1/4" x 1/2" BUSHING
23	32141	1/2" NPT x 1/2" TUBING FLARE ADAPTER
24	32140	1/2" LONG NUT
25	32139	1/2" NPT x 1/2" TUBING SLIP ADAPTER
26	32442	2" x 1/2" x 1/2" NPT DUPLEX HEX BUSHING
27	32021	3/4" CHECK VALVE
28	32061	3/4" CHECK VALVE SCREEN
29	32445	1/2" PIPE CAP
30	32474	PIPE REDUCER 1/2 - 1/4 BRASS HEX
31	32335	1/8 MNPT X 1/4FNPT

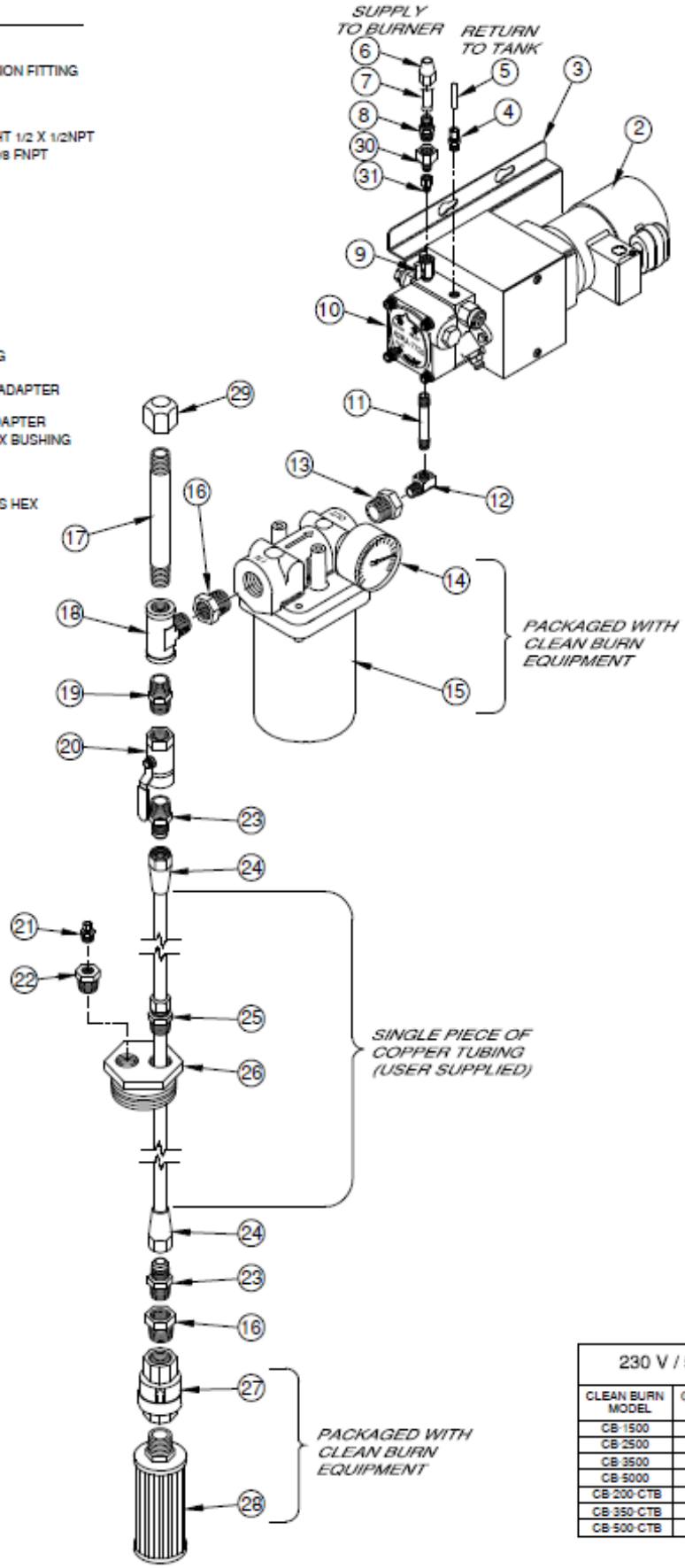

230 V / 50 Hz	
CLEAN BURN MODEL	GEARMOTOR PART #
CB-1500	33425
CB-2500	33426
CB-3500	33427
CB-5000	33428
CB-200-CTB	33530
CB-350-CTB	33436
CB-500-CTB	33571

I88728-F

Figure 4F - Metering Pump Component Detail

Installing the Metering Pump (continued)

Alternate Mounting: Horizontal Positioning

ATTENTION: If the metering pump is to be mounted horizontally or on a bracket, as shown in Figure 4G, the pump head must be rotated counterclockwise so that it is aligned in a horizontal position. ***The gauge arrow on the pump head must point up, or the pump will not prime.***

1. Refer to Figures 4F and 4G.
2. Remove the two pump mounting bolts. The coupling is keyed and does not have set screws.
3. Rotate the pump head 180 degrees to the horizontal position as shown in Figure 4G.
4. Re-install and tighten the two pump mounting bolts.
5. Use the appropriate type of bolts and washers (user-supplied) to securely mount the metering pump to the mounting bracket, which is to be installed on the appropriate wall in your building at a distance from the tank that complies with the suction oil line requirements.

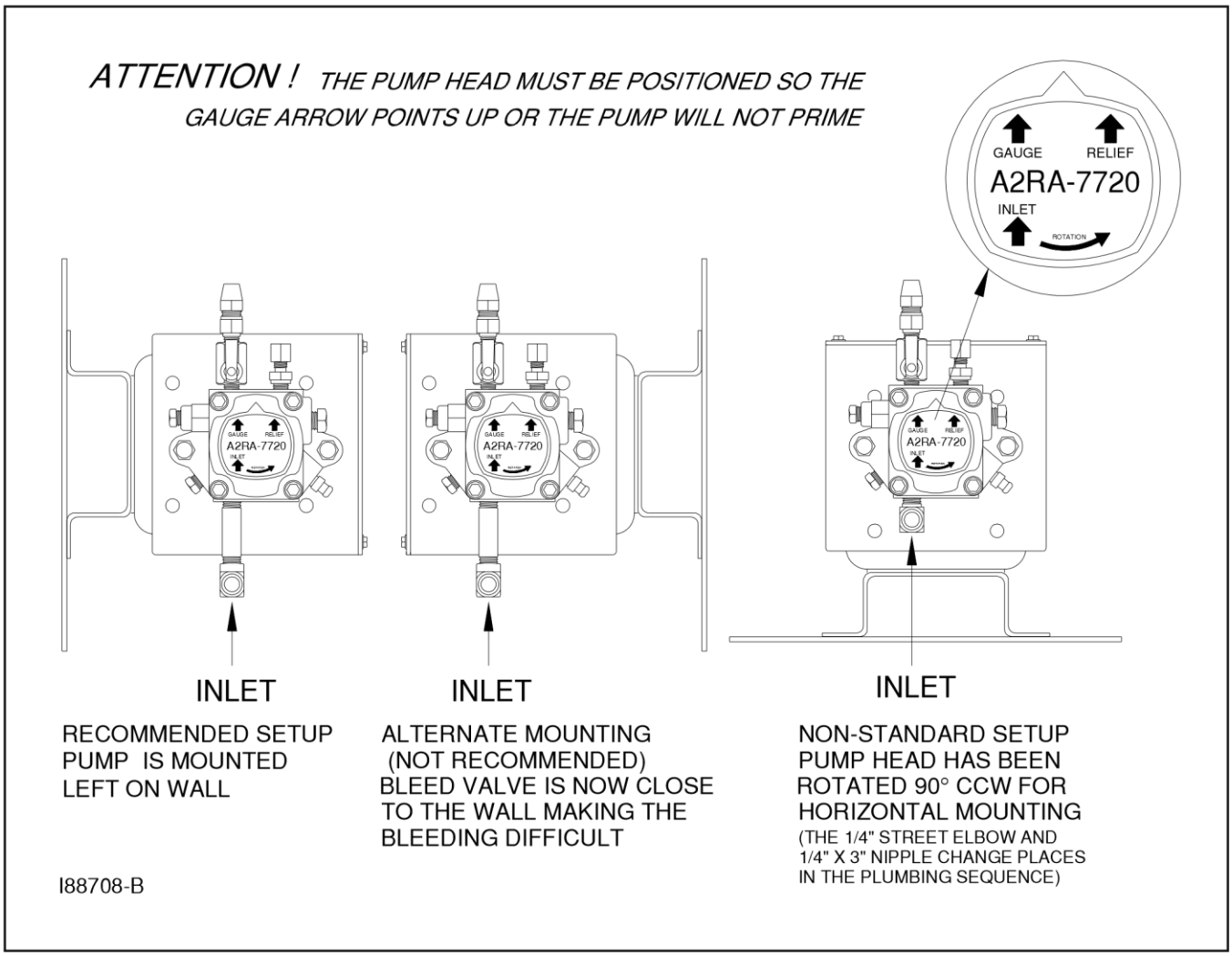

Figure 4G - Proper Positioning of Metering Pump Head

Connecting Water to the Coil Tuber Boiler

IMPORTANT NOTE! Detailed information on the installation and operation of the hydronics system is provided in Section 10 of this manual. The instructions provided here are abbreviated and serve only to indicate *when* these procedures should be performed; consult Section 10 for the detailed version.

1. Connect the desired header supply and return lines to the CTB.
2. Have the water trim installed by a certified hydronics technician. Heat exchangers must be used for domestic water heater installations.
3. For air separation and elimination, Clean Burn recommends the Enhanced Spiral-Type Air Separator which can be supplied by your local Clean Burn dealer. Installing an air separator helps ensure that air is purged from the boiler, which is necessary for optimal startup and operation of the burner.
4. The relief valve discharge must be piped to within four inches of the floor or to a floor drain. Be sure to allow for clearance to remove the back panel for servicing.

Filling the Coil Tube Boiler with Water

ATTENTION: ***It is necessary to fill the CTB with water prior to wiring and turning the CTB ON.*** The boiler circulator bearings are water lubricated and should not be allowed to operate dry. Filling the CTB with water provides immediate lubrication of the bearings. Purging air from the water is also critical. Doing so enables proper startup of the burner.

1. Fill the CTB with clean tap water.
   ATTENTION: To prevent damage to the CTB, DO NOT fill the boiler with water when the boiler is hot.
2. The pressure gauge should read 0.8 bar (12 psig). If a different operating pressure is needed, contact the Clean Burn Service Department for additional instructions.
3. **Refer to Section 10, The CTB Hydronic System, for additional information.**

Installing the Suction Oil Line Components

ATTENTION: It is critical that you adhere to the following specifications for suction oil line installation *(oil line from the tank to the pump)*. If these specifications are not met, the metering pump will not function correctly, and the burner will shut down on reset. The majority of service problems with the metering pump are caused by leaks at fittings in the suction oil line. These problems are eliminated by ensuring a 100% airtight suction oil line which slants up to the pump.

- All suction oil line components must be installed as shown in Figures 4A, 4B, and 4F. **Suction line size is 13 mm (1/2") diameter.** Proper installation allows the suction oil line to be filled with used oil during initial priming.

- The suction oil line may NOT exceed **6.0 inch (15 cm) Hg maximum operating vacuum**. This equals 183 cm (6 feet) TOTAL vertical lift AND 122 cm (4 feet) TOTAL horizontal lift. To estimate the operating vacuum assume the following equivalents:

  30 cm vertical rise (1 foot) = 0.75 inch Hg (vacuum)
  122 cm horizontal run (4 feet) = 0.75 inch Hg (vacuum)

  NOTE: ALSO ADD 0.75 inch Hg to the final sum to account for every oil filter, shut-off valve, and check valve on the suction side of the pump assembly.

  Sample calculation: 183 cm (6') vertical x (0.75 inch Hg/30 cm) = 4.50 inch Hg AND
  122 cm (4') horizontal = 0.75 inch Hg
  4.50 + 0.75 + 0.75 = 6.00 inch Hg vacuum

- The metering pump must be installed with a **check valve and screen** at the end of the suction oil line, or the pump will not maintain its prime.

- Use **Permatex #2 non-hardening gasket sealer** on every threaded fitting. DO NOT use teflon tape or teflon pipe dope compounds, as the teflon can flake off and cause damage to the pump head.

- **The suction oil line must be 100% airtight for proper system functioning.** Use only high-quality flare fittings for the copper tubing. DO NOT use compression fittings. DO NOT use any steel pipe unions. DO NOT use sweat copper pipe. These types of fittings cause air leaks in the suction oil line and will require re-installation.

- **The suction oil line must slant up to the pump;** any high spots will trap air and will not allow the pump to prime.

1. **Assemble the suction oil line fittings *(from the metering pump to the canister filter)*:**
   a. Refer to Figure 4F for a detailed look at the metering pump components and fittings.
   b. Remove the plug from the 1/4" inlet port of the pump.
   c. Install the 1/4" x 3" brass nipple into the 1/4" inlet port on the pump.
   d. Install the 1/4" brass street elbow onto the 3" brass nipple; turn the fitting onto the nipple until it is tight and faces away from the pump mounting plate.
   e. Prepare the canister filter for installation:
      - Install the 3/4" x 1/4" brass hex bushing into the outlet port of the canister filter. *Check the direction of the arrow for the proper flow.*

Installing the Suction Oil Line Components (continued)

(e.) Prepare the canister filter for installation *(continued):*

- Install the 3/4" x 1/2" brass bushing into the inlet port of the canister filter.
- Remove the plug from one of the 1/8" gauge ports in the canister filter and install the vacuum gauge. Seal the threads of the gauge with Permatex #2 non-hardening gasket sealer.
- Install the 1/2" threaded pipe adapter into one side of the 1/2" ball valve.
- Install the 1/2" MPT x 1/2" flare adapter into the other side of the ball valve.
- Install this assembly into one side of the 1/2" brass tee.
- Install the assembled 1/2" tee into the 3/4" x 1/2" brass bushing, which is installed in the inlet port of the canister filter. Make sure that the 1/2" flare adapter is pointing down.
- Install the canister filter assembly onto the 1/4" brass street elbow as shown in Figure 4F. The canister filter must be installed with the arrow pointing towards the pump (direction of oil flow).
- Install the 1/2" x 5" brass nipple into the top side of the 1/2" brass tee assembly.
- Loosely install the 1/2" brass cap onto this nipple; DO NOT tighten the cap at this time.

2. **Install the suction oil line *(from the tank to the canister filter)*:**
   a. Refer to Figures 4A, 4B, 4D and 4F.
   b. Prepare a piece of 1/2" O.D. copper tubing (user-supplied) which will function as the pick-up line from the tank to the canister filter. This copper tubing must have the following specifications:
      - One continuous piece of 1/2" O.D. copper tubing with no kinks or fittings.
      - Slant up from the tank to the pump with no loops or high points to trap air.
   c. Locate the 2" MPT x 1/2" FPT x 1/2" FPT duplex, slip-thru hex bushing (which will eventually be installed into one of the 2" openings on the tank). *Note that the fitting is marked "S" for suction and "R" for return.*
   d. Install the 1/2" MPT x 1/2" slip fitting into the "S" side of the 2" duplex slip-thru hex bushing.
   e. Install the 1/4" MPT x 1/4" compression fitting into the 1/2" x 1/4" brass bushing.
   f. Install the 1/2" x 1/4" brass bushing into the "R" side of the 2" duplex slip-thru hex bushing.
   g. Measure the height of the oil tank (from the bottom of the tank, NOT the floor) to the 2" opening that you are going to use for the supply oil line. Deduct 12" (305mm) from this measurement and transfer this new measurement onto the 1/2" O.D. copper tubing.
   h. Remove the locking nut and ferrel sleeve connector from the 1/2" slip fitting, and slide them over the copper tubing.
   i. Slide the 1/2" O.D. copper tubing through the 1/2" slip fitting, which is installed in the "S" side of the 2" hex bushing.
   j. Install the screen into one side of the 3/4" check valve (making sure the arrow is pointing away from the screen assembly).
   k. Install the 3/4" x 1/2" brass bushing into the 3/4" check valve.
   l. Install the 1/2" MPT x 1/2" flare adapter into the 3/4" x 1/2" brass bushing.
   m. Slide the 1/2" flare nut over the end of the 1/2" copper tubing, and flare the end of the tubing. **NOTE:** Use a high-quality 45 Degree flaring tool (such as a Rigid Flaring Tool) to ensure that all flares are made properly (i.e. so they will be 100% airtight).

Installing the Suction Oil Line Components (continued)

n. Install the flared oil line and nut onto the assembled check valve/screen and tighten.
o. Pick up the assembled oil line, and carefully guide the end of the tubing with the check valve through the 2" tank opening.
p. Apply Permatex #2 sealer (or equivalent) to the threads of the 2" duplex slip-thru tank bushing and tighten this fitting into the tank.
q. Pull the 1/2" copper tubing back up through the slip fitting until you see the mark that you put on the tubing earlier. Holding the tubing with one hand, push the ferrel sleeve connector and locking nut down the tubing, then tighten onto the 1/2" slip fitting. The oil line is now installed in the correct position off of the bottom of the tank.
r. Carefully bend the oil line up to the canister filter. Use a spring bender over the tubing to prevent kinks in the oil line. Allowing for the flare nut, cut off the excess tubing.
s. Install the 1/2" flare nut onto the tubing and flare the end of the tubing.
t. Install the end of the tubing with the flare nut onto the 1/2" flare adapter (on the ball valve assembly at the canister filter).
u. Install a vent from the tank to the outside of the building according to code. The vent allows air to enter as oil is pumped out and to safely vent fumes to the outside. See Figures 4J.
v. Install plugs in all other tank openings as required by code.
w. Inspect the installation. For proper suction oil line operation, make sure all components are installed and positioned as specified in this manual.

Installing the Pressure Relief Oil Line Back to the Tank

ATTENTION: It is critical that you adhere to the following specifications for plumbing the pressure relief back to the tank.

The metering pump requires the installation of a pressure relief oil line back to the tank that you are pulling oil from as shown in Figures 4A, 4B, and 4D.

- The **pressure relief** will open and relieve pressure if there is a restriction in the pressure oil line, clogged nozzle, etc.

Be sure to use Permatex #2 non-hardening gasket sealer to seal every threaded fitting. DO NOT use Teflon tape or Teflon pipe dope compounds.

1. Refer to Figure 4H.
2. Remove the plug from the relief port on top of the metering pump head.
3. Install the 1/8 NPT x 1/4 tube compression fitting in the relief port on top of the pump head.
4. Install 1/4" O.D. copper tubing (user-supplied) from the pressure relief port back to the oil tank. Refer to Figure 4J as needed.

#	PART #	DESCRIPTION
1	32475	METERING PUMP HEAD (7720)
2	32526	MINI BALL VALVE 1/8 MNPT X 1/8 FNPT
3	32335	1/8 MNPT X 1/4FNPT
4	32474	PIPE REDUCER 1/2 - 1/4 BRASS HEX
5	32141	FLARED TUB. TO PIPE STRAIGHT 1/2 X 1/2NPT
6	INSTALLER SUPPLIED	1/2 COPPER OR ALUM. TUBING
7	32140	LONG NUT 1/2
8	INSTALLER SUPPLIED	1/4 COPPER OR ALLUM.TUBING
9	32037	1/8MNPT X 1/4 COMP. FITTING

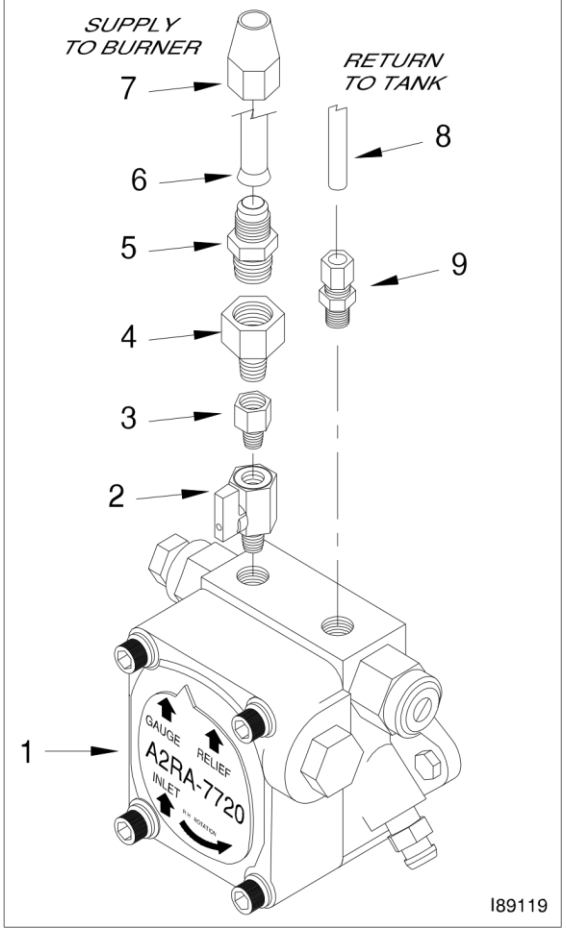

Figure 4H - Pressure Relief Oil Line Back to the Tank

Installing the Pressure Oil Line Components

ATTENTION: It is critical that you adhere to the following specifications for pressure oil line installation (oil line from the pump to the CTB). If these specifications are not met, the metering pump will not function correctly and the burner will shut down on reset.

The parameters for pressure oil line installation are:

Length of Pressure Line	Line Size
Up to 30 m (100 feet)	10 mm (3/8 inch) O.D. copper tubing

(Please note that some installations will allow for a greater pressure line length. Contact your Authorized Clean Burn Distributor for more information.)

- **The pressure oil line must slant up to the burner** with no loops or high points to trap air.
- Local codes may require the installation of an in-line **"Fire-O-Matic" safety valve**. Be sure to check all appropriate codes to ensure compliance.

1. Refer to Figures 4A, 4B, and 4H.
2. Make sure you have purchased all the necessary fittings to complete the installation correctly.
3. Install the fittings and components as shown in the related illustrations. Be sure to use Permatex #2 non-hardening gasket sealer to seal every threaded fitting. DO NOT use Teflon tape or Teflon pipe dope compounds.

Installing the Compressed Air Line

NOTE: Your air compressor system must supply air pressure to the CTB with the following requirements: **3.5 bar (50 psi)** and **water trap or dryer.** If you do not have shop air, an optional air compressor is available. Contact your local Clean Burn dealer for more information.

1. Run a compressed air line from your shop air to the connector block on the CTB. Use a minimum size of 6 mm (1/4 inch) O.D. copper tubing or equivalent.
2. Install an easily accessible shut-off valve in the air line so the burner can be serviced without shutting off the shop air in your service area.
3. If necessary, install a pressure regulator (in addition to the burner air regulator) in the air line, and set it at 3.5 bar (50 psi).
   ATTENTION: DO NOT feed full shop air pressure to the burner or damage to burner components may occur.
4. Install a water trap or extractor/dryer in the air line with an automatic drain so compressed air (rather than water) is supplied to the burner.
   ATTENTION: Water must not be fed to the burner, or the flame will be extinguished, and the burner will shut down. Be sure to drain water from your compressor tank on a regular basis to keep water out of the air line.

Wiring the Coil Tube Boiler

WARNING: To avoid electrical shock, make sure that power to the CTB is turned OFF before connecting any wires. A licensed electrician should install all wiring to your CTB. All wiring must be in accordance with the national and local codes. Properly size all wires and use electrical conduit for all electrical lines. Specific wiring schematics are provided in **Appendix B** at the back of this manual. **For safe and proper operation of the boiler, DO NOT alter factory installed wiring.**

Wiring your CTB involves the installation of three lines/circuits:

(1) A dedicated electrical line to the CTB
(2) A pump electrical circuit from the CTB to the metering pump
(3) A separate circuit for the load loop circulator

IMPORTANT NOTE: Separate, dedicated lines/circuits must be wired ***for each boiler*** in the dual-stacked arrangement.

Wiring to the Coil Tube Boiler

WARNING: A fuse-protected disconnect must be mounted in a readily accessible location for the installation of the unit. This device can also be used for a disconnect in case of emergency.

1. Install a ***dedicated electrical circuit*** to the electrical junction box on the CTB. Note that the dual-stacked boiler setup will require two circuits.
   CAUTION: DO NOT tie into an existing circuit, or electrical overload may occur.
2. Wire the CTB according to the Wiring Schematic in Appendix B. ***Ensure that the ground wire is attached to the GREEN ground screw on the CTB junction box.***
3. Check for correct voltage at the CTB and refer to the following chart.
   ATTENTION: Incorrect voltage may damage CTB components.

Total Amp Draw Per Burner & Circulator: 9.4 amps
Load Circulator Ampacity: 2.5 amps (when wired through the CTB control box)

Model	Voltage	Breaker Qty. & Size*	Phase	Hertz
CB-200-CTB (single)	230	(1) @ 20 amps	Single	50
CB-200-CTB (Dual-Stacked)	230	(2) @ 20 amps	Single	50
CB-350-CTB (single)	230	(1) @ 20 amps	Single	50
CB-350-CTB (Dual-Stacked)	230	(2) @ 20 amps	Single	50
CB-500-CTB (single)	230	(1) @ 20 amps	Single	50

***NOTE:** Breaker size with optional equipment is 30 amps. When installing any optional equipment (e.g. air compressor or draft inducer), you do not need to "upgrade" the breaker size. Make sure a qualified electrician properly sizes and installs the electrical circuits. Note that **10-gauge copper wire is required for a 30 amp breaker.**

CAUTION: DO NOT turn on the main power until instructed to do so.

Wiring to the Metering Pump

WARNING: DO NOT wire the pump directly into your building's electrical system. The pump must be activated (receive power) from the burner via the pump electrical circuit. DO NOT wire the pump directly to a wall outlet so that it runs continuously. This will seriously damage your metering pump and/or CTB and may result in a fire or explosion hazard.

1. Install the pump electrical circuit from the CTB to the metering pump location using approved electrical conduit (refer to Figures 4A and 4B).
2. Wire the pump circuit according to the **Metering Pump Wiring Schematic** in Appendix B at the back of this manual.

Wiring the Load Loop Circulator

NOTE: To reduce the amount of cold water returned to the boiler (and to protect the boiler from thermal shock), an optional circulator aquastat can be supplied by your Clean Burn Dealer.

1. Refer to the related information and illustrations in Section 10 and the CTB Wiring Diagram in Appendix B to locate and understand the wiring for the load loop circulator.
2. The cold water return in your CTB system installation should not be below 60ºC (140ºF).

NOTE: For installations where cold water return is a risk, Clean Burn recommends installation of a blending loop. If a blending loop is installed in your CTB system, the load loop circulator should be wired separately from the CTB control box. Refer to Section 10 for additional information.

Installing the Stack

WARNING: Inappropriate stack materials or improper stack design/installation can adversely affect the proper, safe operation of your CTB.

Stack designs are generally classified as follows:

(1) "Class A" stack through the ceiling of the building
(2) "Class A" stack through the sidewall and up the side of the building

Stack Design and Specifications

ATTENTION: ***The stack design must be single and dedicated for each unit (CTB).*** Failure to adhere to this rule may result in less than optimal system performance.

Figure 4I illustrates the through-the-ceiling stack designs. This stack design is preferable and is more commonly used. Refer to Figure 4J for the dual-stacked boiler stack design. When designing your stack, adhere to the following specifications:

- Models CB-200-CTB and CB-350-CTB require **20 cm (8 inch) I.D. stack components.** Model CB-500-CTB requires **25 cm (10 inch) I.D. stack components.**
- Dual-stacked units require two (2) individual stacks, not connected together.
- *Ensure that the vertical stack height is* ***at least 3 m (10 feet) tall PLUS 45 cm (1.5 feet) for every fitting*** *(e.g. 45 degree, 90 degree, or T) in the stack run.* If needed, increase the vertical length of the stack or install a draft inducer to obtain -.02 inches Water Column draft over fire. (Section 8 contains details on adjusting the draft.)
- *Keep the horizontal stack run as short as possible*; slant it upward at a minimum of 6 mm (1/4 inch) per 30 cm (1 foot) of run.
- *Keep the stack design simple.* Complicated stacks (with long runs and many turns) reduce draft and result in poor burner performance. **Your stack may include only one 90 degree turn**. All other stack turns must be at 45 degrees or less to ensure optimal performance.

NOTE: If you plan to use an existing masonry chimney, the chimney must be *lined* and *inside* the building. Exterior masonry chimneys chill the stack gases and result in poor draft and performance.

ATTENTION: If you have an exhaust fan(s) in your shop, ***it is critical that you have adequate make up air (source of fresh air to replace the stale air exhausted by the fan).*** When an exhaust fan is run without adequate make up air, the resultant vacuum in the building will draw combustion products back into the burner. This back draft causes poor burner performance and may damage vital burner components. Refer to Section 8 in this manual for additional information.

Stack components should be installed in the following order:

(1) Inside stack *(from CTB breach to within 45 cm (18") of ceiling, roof, or sidewall of building)*
(2) Barometric damper
(3) "Class A" stack penetration through the ceiling, roof, or sidewall
(4) "Class A" stack on the exterior of the building
(5) "Class A" stack cap

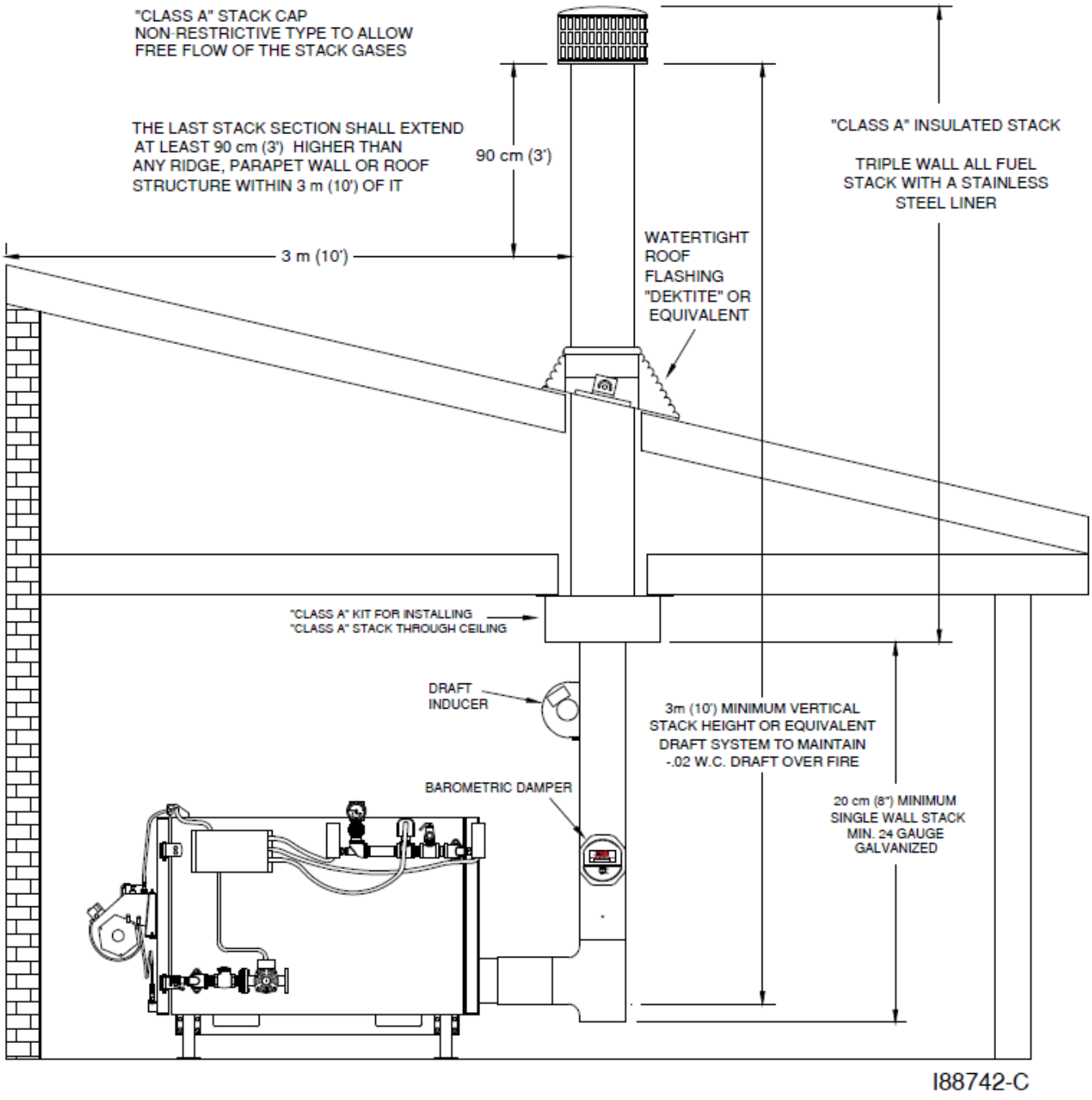

Figure 4I - Installation of "Class A" Stack Through Roof/Ceiling

Installing the Stack (continued)

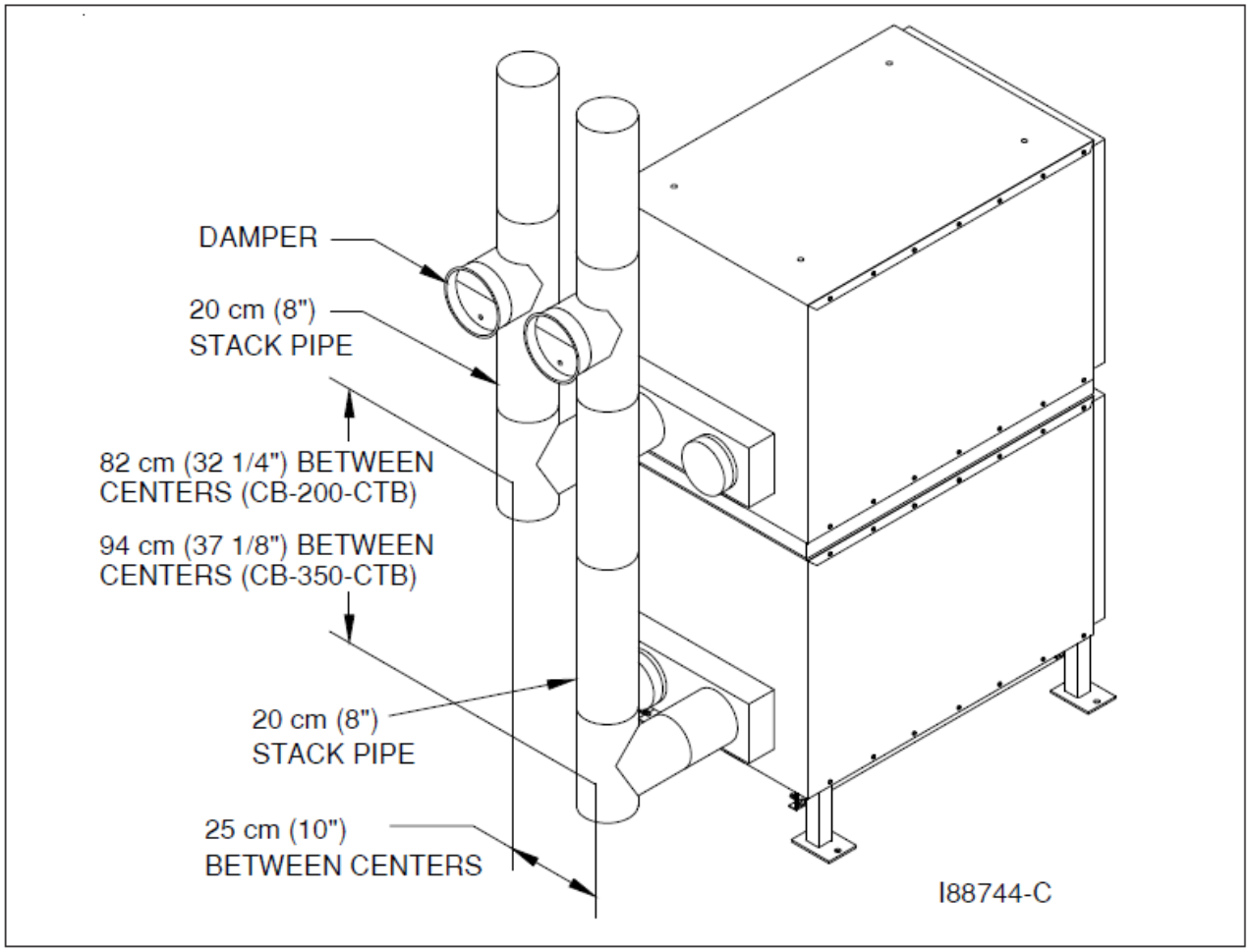

Figure 4J – Detail of Dual-Stacked Boiler Stack Installation

Installing the Interior Stack

WARNING: Single-wall stack components may be used *only* for those portions of the stack which are located inside your building and away from any fire/burn hazards.

1. The stack can be installed from either side of the smoke hood breach. Install the smoke cap onto the unused smoke hood breach ring assembly.
2. Install a piece of the single-wall, 24-gauge, galvanized stack (minimum 45 cm (18 inch) in length onto the smoke hood breach.
3. Install an elbow or clean-out tee (with the cap installed in the bottom) onto the extension piece from the boiler smoke hood breach.
4. Install a smoke pipe tee onto this elbow or clean-out tee (for installation of the barometric damper).

ATTENTION: Avoid additional 90-degree turns in the stack. Turns slow down stack gases, create back-pressure, and reduce draft, which can lead to poor performance. All other turns in the stack should be at a 45-degree (or smaller) angle.

Installing the Barometric Damper

1. Refer to the stack installation drawing, Figure 4K. Install a single wall tee (min. 24 gauge) in the first straight vertical or horizontal stack section within 1 m (40 inches) of the CTB breach. **NOTE: The tee is required to support the barometric damper.** You must purchase this tee when you purchase your stack materials (8 inch single wall tee - CB#70174).
   ATTENTION: ***For Dual-Stacked Units Only*** **–** You are required to install two dampers (provided) – one for each boiler. DO NOT attempt to substitute other types of dampers. They will not allow the unit to function properly and may void your warranty.
2. Install the barometric damper in the opening of the tee. Use a small bubble level to make sure that it is properly level.
3. Install two self-tapping screws as shown in Figure 4K (i.e. one on each side) to hold the damper in place. DO NOT install a screw at the bottom of the barometric damper, or the flapper of the damper will not operate correctly.

NOTE: Specifications for adjusting the barometric damper for proper draft overfire are provided in **Section 8** of this manual.

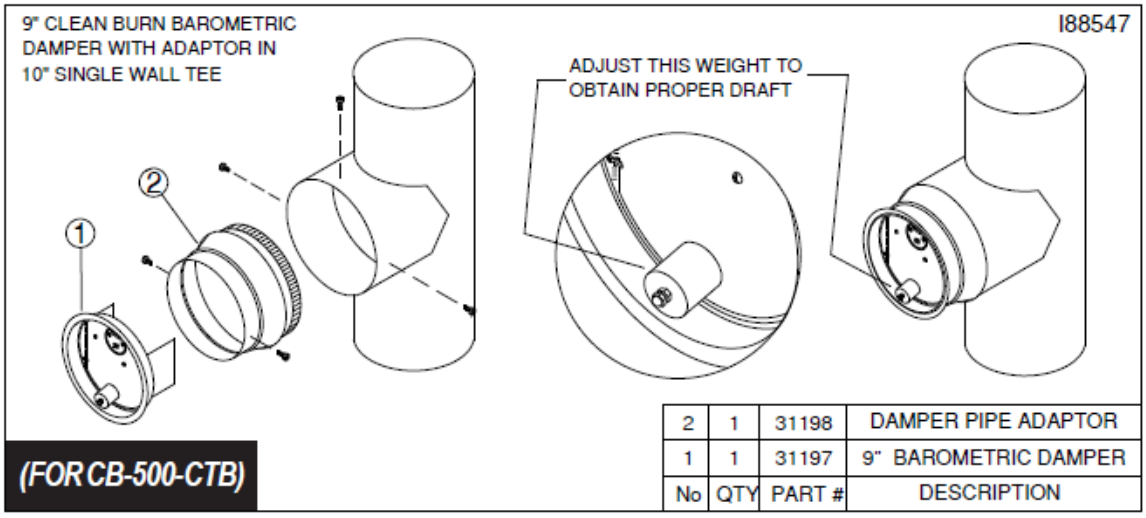

No	QTY	PART #	DESCRIPTION
2	1	31198	DAMPER PIPE ADAPTOR
1	1	31197	9" BAROMETRIC DAMPER

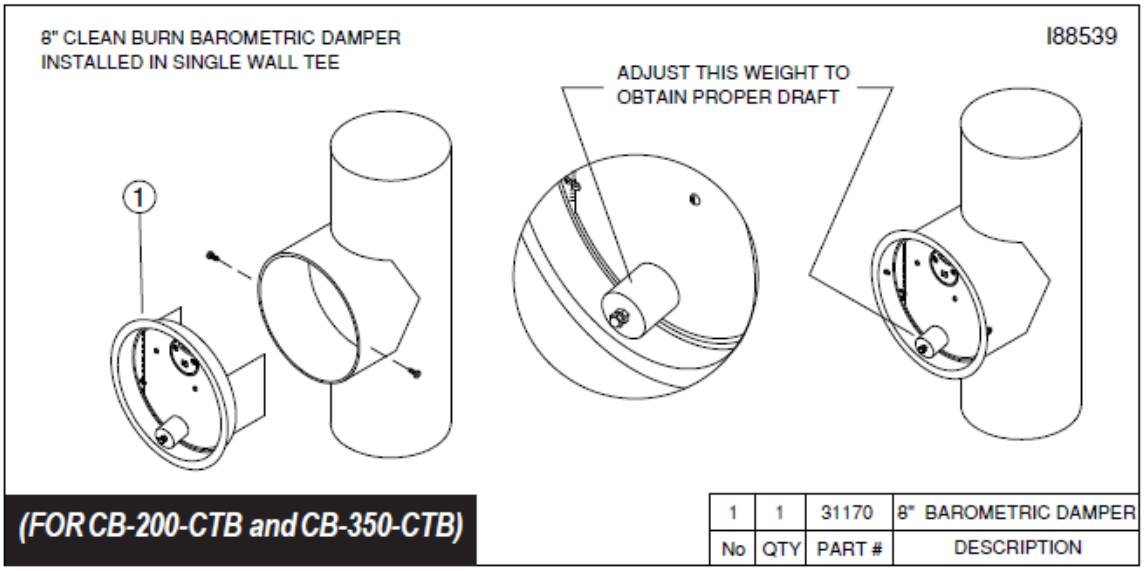

No	QTY	PART #	DESCRIPTION
1	1	31170	8" BAROMETRIC DAMPER

Figure 4K - Installation of Barometric Damper

Installing the Optional Stack Safety Switch

CAUTION: For your safety and the safe operation of your heating equipment, the stack switch must be installed by a qualified installer in accordance with the installation instructions provided here. Wiring must be accomplished in accordance with all applicable codes. Failure to adhere to these safety recommendations may result in serious personal injury and/or equipment damage.

1. Follow the instructions in the ***Operator's Manual, Section 4*** to install a proper stack, including the barometric damper which must be installed within 1 meter (40 inches) of the breach.
   NOTE: The barometric damper must be installed so that it is level and the flapper moves freely.
2. Ensure that main power to the heating equipment is turned OFF.
3. Position the stack safety switch over the lip of the barometric damper as shown in Figure 4K.
4. Drill a pilot hole for the mounting screw and mount the stack safety switch using the mounting screw supplied with the switch.
   NOTE: The mounting screw must not interfere with the free movement of the flapper on the barometric damper.
5. Install the wall thermostat according to the instructions provided in the ***Operator's Manual, Section 4***. Wire the wall thermostat and stack safety switch in series as shown in Figure 4L. Install the wire so that it is secured away from any hot surfaces.
   NOTE: If a 24V thermostat is not used to activate the boiler, the stack safety switch is connected directly to the landings on top of the control box. Refer to Appendix B for the control box wiring diagram.
6. When the heating equipment installation is completed, follow the instructions in the ***Operator's Manual, Sections 5 and 6*** to prime the pump and start/adjust the burner.
7. Follow instructions in the ***Operator's Manual, Section 8*** to check the draft; this is crucial for the proper, safe operation of the heating equipment.

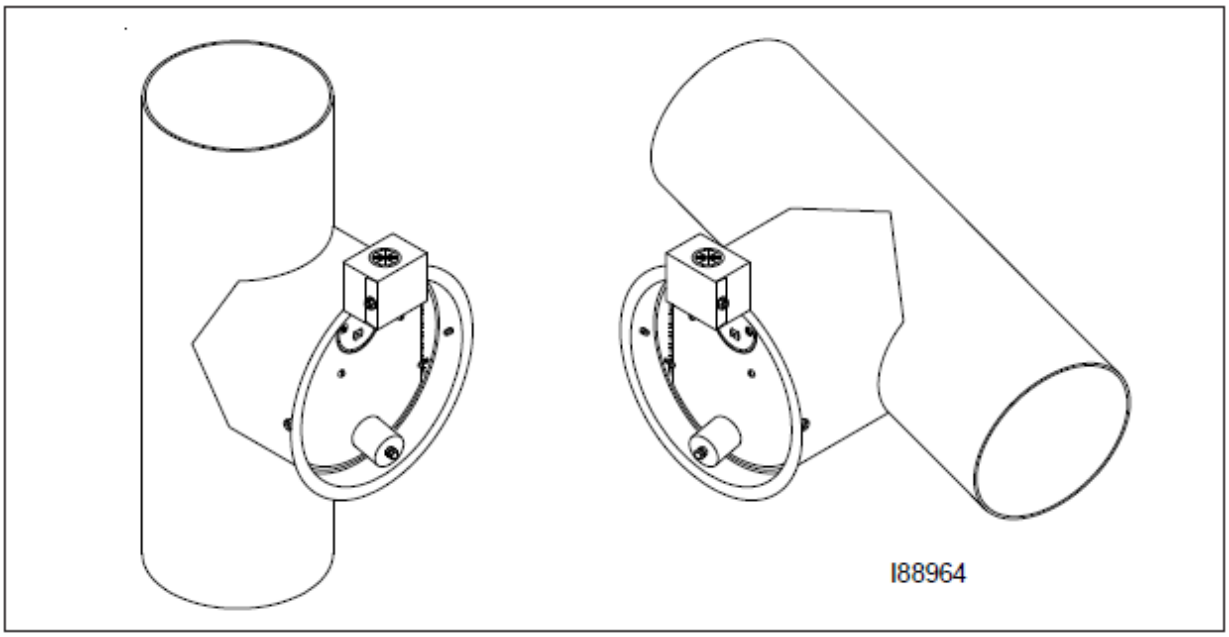

Figure 4L - Installation of Barometric Damper

Resetting the Stack Safety Switch

WARNING: BURN HAZARD! To prevent serious personal injury, be sure to allow ample time, at least 30 minutes, for the stack, barometric damper, and switch to cool down before attempting to access and service these components. It is crucial to identify the cause of the stack obstruction (e.g. heavy snowfall) and correct it *before* resetting the stack safety switch and re-starting the burner. **DO NOT operate the heating equipment with an obstructed stack**; failure to correct an obstructed stack may result in fire, explosion, and/or burn hazards causing serious personal injury or death.

NOTE: In locations where heavy snowfall occurs, it is critical that the stack remain unobstructed by snow. For safe heating equipment operation, be sure to keep the area surrounding the stack clear.

1. Before resetting the stack safety switch, check the stack to make sure it is clear of any obstructions.
2. Remove the cover from the stack safety switch and push the small button in the middle of the switch.
3. Pushing the stack safety switch reset button will re-establish the thermostat circuit, and the burner will start (assuming the wall thermostat is calling for heat).

Understanding the Function of the Stack Safety Switch

The **Stack Safety Switch** monitors the temperature at the barometric damper on the stack and is designed to detect the obstruction of the free flow of stack gases from the heating equipment and shut down the burner. Obstruction of the stack results in the "spillage" of stack gases from the barometric damper, which heats up the switch. The switch then opens, disconnecting the thermostat circuit to the burner, and the burner shuts off.

Stack Safety Switch Specifications:

Switching Voltage	24 volts
Switch OPEN Temperature	180 °F
Switch Type	L180, normally closed, manual reset

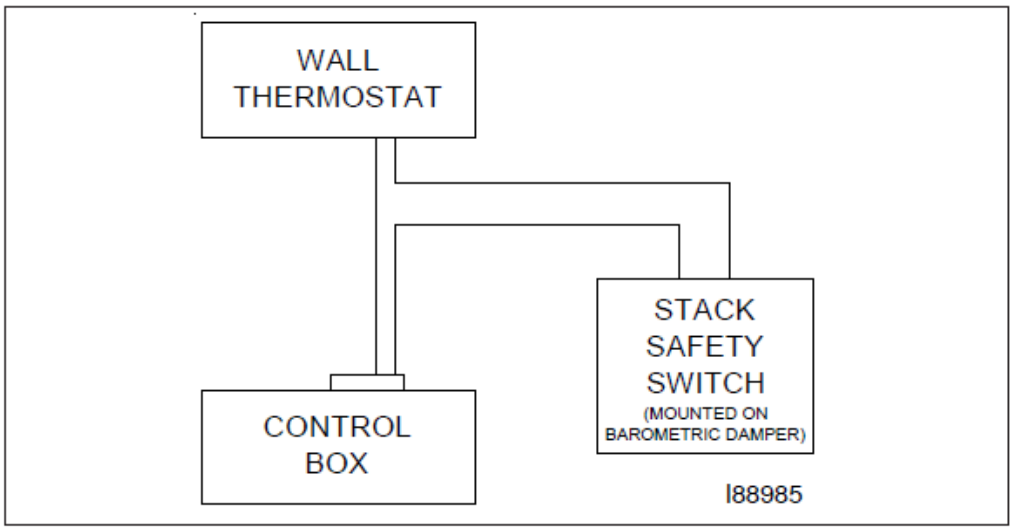

Figure 4M - Stack Safety Switch Wiring Diagram

Installing the Stack Penetration

WARNING: When running the stack through your ceiling, roof, or sidewall, you must use **Class A double-wall insulated all-fuel stack components** with a stainless-steel liner. DO NOT run single-wall stack through your ceiling, roof or sidewall. NEVER locate a stack joint inside walls or in a joist spacer. Ensure proper clearances from combustibles per all applicable codes.

1. Refer to Figure 4I as needed.
2. Follow the installation instructions provided by the stack manufacturer.

Installing the Exterior Stack

ATTENTION: All exterior stack pieces must be Class A double-wall insulated all-fuel stack components with a stainless-steel liner.

- DO NOT use Class B or BW Vent/double-wall components (for gas fired appliances only).
- DO NOT use Type L Vent/double-wall components (for approved fuel oil appliances only).
- DO NOT use black stack pipe (for solid fuel burning appliances only).
- DO NOT use single-wall stack for your exterior stack. Single-wall exterior stack chills the stack gases and results in poor draft and poor burner performance.

1. Refer to Figure 4I as needed.
2. Follow the installation instructions provided by the stack manufacturer.
3. Install water-tight roof flashing around the penetration of the exterior stack.
   NOTE: Clean Burn recommends the use of "Dektite" flashing (or equivalent) which ensures a water-tight seal when installed properly. Contact your local Clean Burn dealer for details.

Installing the Stack Cap

NOTE: Proper installation of a "Class A" stack cap ensures the free flow of stack gases which is essential for optimal burner performance.

1. Refer to Figure 4I as needed. Your stack cap should be classified as: "Class A" non-restrictive, all-fuel type.
2. Install the stack cap according to the manufacturer's instructions.

Installing the Draft Inducer (Optional)

ATTENTION: The Field draft inducers have been tested for use on Clean Burn CTBs. DO NOT use other models or brands of draft inducers.

Understanding the Importance of the Draft Inducer
The draft inducer is designed to aid the natural draft created by the appliance to vent the combustion gases outside of the building. As the paddle wheel turns, a negative pressure is maintained at the CTB outlet so that the combustion gases can leave the CTB and travel out of the stack. (See Figure 4N.)
Proper sizing, installation, and adjustment of the draft inducer are critical for optimal draft inducer operation.

Installing the Draft Inducer (continued)

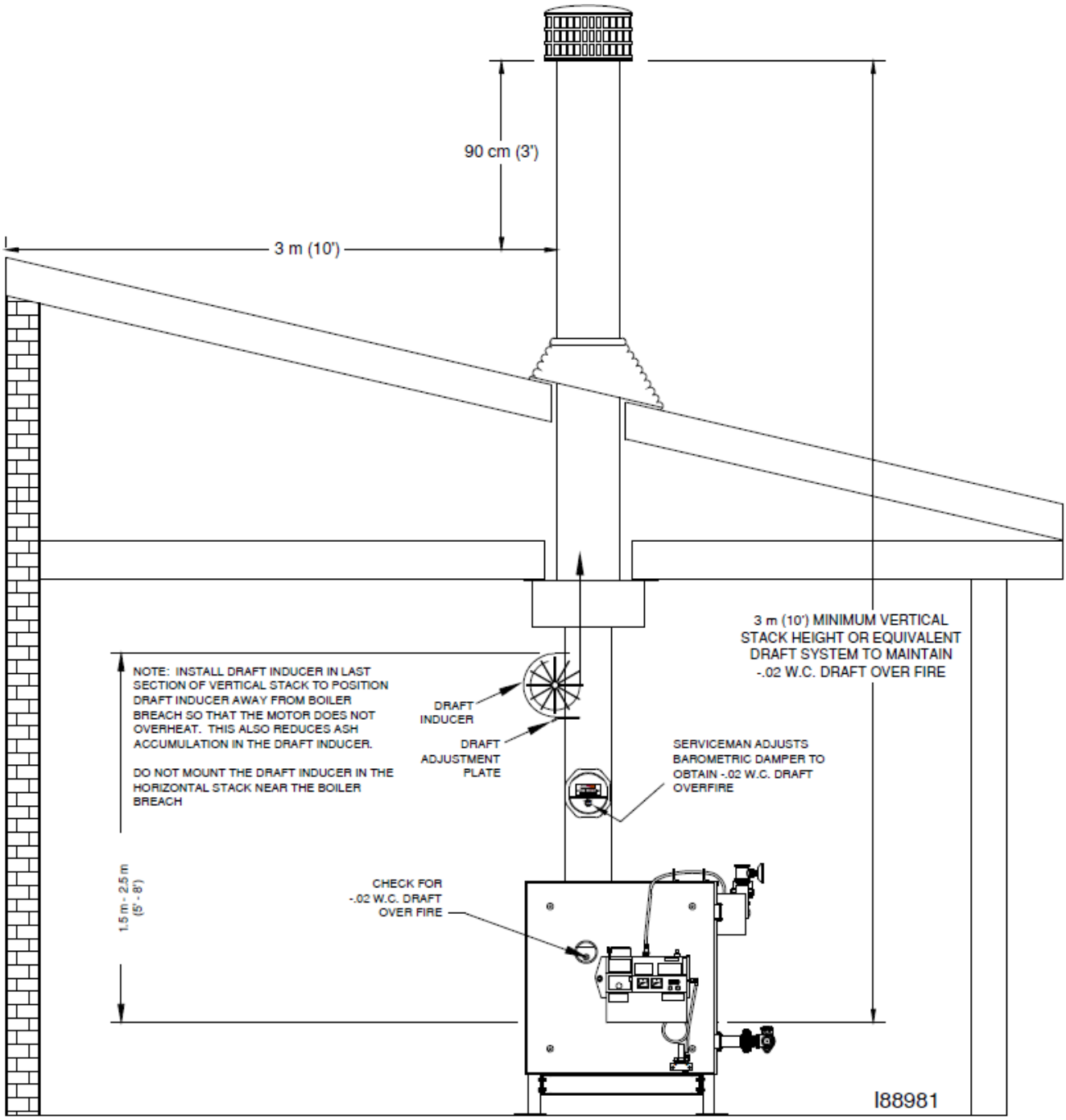

Figure 4N - Installation of the Draft Inducer

WARNING: Turn OFF the main power to the CTB before proceeding with the installation of the draft inducer.

ATTENTION: It is very important to install the draft inducer on a vertical section of stack to isolate the inducer from excessive heat and ash buildup. Never install the draft inducer on a horizontal section of stack close to the CTB breach where heat and ash will damage the inducer motor.

Installing the Draft Inducer (continued)

1. Refer to Figure 4N. Follow the instructions included with the draft inducer to mount the draft inducer on the section of single-wall vertical stack.
2. Position the draft plate all the way out, so it does not reduce the draft produced by the inducer. You will adjust the draft plate later as part of **Adjusting the Draft Overfire (Section 8)**.

Wiring the Draft Inducer for Normal Operation (No exhaust fans in the building):

1. Wire the draft inducer according to the **Wiring Diagram** provided in **Appendix B** at the back of this manual.

Installing the Wall Thermostat or Aquastat

IMPORTANT NOTE: A 24V wall thermostat is available separately from Clean Burn (i.e. it is not included with the CTB). If a 24V thermostat is used to activate the boiler, a qualified technician would need to remove the jumper from the external four landings on top of the black control box on the side of the boiler and use it to connect landings 5 and L1 on the internal terminal block. The 24V thermostat is then connected into the optional stack safety switch landing. Refer to Appendix B for the control box wiring diagram.

Refer to Appendix A in this manual for additional information on remote temperature sensing controls available from Clean Burn for your CTB system installation.

1. Select a location for the thermostat on an interior wall away from any hot or cold drafts.
2. Remove the top cover from the thermostat by pushing gently on the latch on the right side of the case. *(Hold the thermostat base in one hand, and grasp the cover with the other hand; push in on the latch with your thumb, and pull the cover away from the base.)*
   ATTENTION: DO NOT use a screwdriver to pry the cover off the base, or damage may occur.
3. Remove the green paper insert and black plastic tab located in the battery compartment.
4. Refer to the **CTB Wiring Diagram** in **Appendix B** at the back of this manual. Run two wire, 18gauge (minimum) thermostat cable from the terminals on the back of the thermostat base to the T/T terminals located on the control box on the side of the boiler. DO NOT run the wiring to the primary control!
   ATTENTION: NEVER jump between terminals of the thermostat wire without removing one of the wires. Failure to remove one of the wires will burn out the heat anticipator on the thermostat and will cause the thermostat to fail.
5. Mount the thermostat base 152 to 168 cm (60 to 66 inches) from the floor using the hardware provided.
6. Re-assemble the thermostat cover onto the base. *(Align the hinges on the side of the cover with the slots on the base and swing the cover into place.)*

Replacing the Wall Thermostat Batteries

1. Proper battery level is indicated by the room temperature being displayed on the LCD screen.
2. When the battery level becomes low, a battery icon along with the word "REPLACE" will be displayed in the lower left corner of the LCD screen. Replace the batteries to ensure proper operation, following the previous instructions on the thermostat disassembly procedure.
3. If the batteries are not replaced, the display will slowly become dim and not display any information. The thermostat will eventually not function. If this happens, replace the batteries immediately.

Inspecting the Coil Tube Boiler Installation

Following completion of all installation activities described in this chapter, the CTB should be inspected by qualified personnel before firing. This ensures that your installation meets all applicable safety codes and allows for any deficiencies to be corrected before CTB startup. *Improper installation may damage the equipment and void your warranty.*

NOTE: ***Important!*** During the inspection, be sure to **check the aquastat settings**. Initial settings are listed here:

- Operating Aquastat 82ºC (180ºF) minimum
- Hi-limit Aquastat (with manual reset) 115ºC (240ºF)

Refer to Section 6 for burner startup and final adjustments of the aquastat.

Any changes to these settings should be made only by a qualified hydronics technician. See Section 10, The CTB Hydronics System, for more information.

SECTION 5: METERING PUMP PRIMING

Understanding Metering Pump Priming

Preparing your Clean Burn CTB for operation begins with priming the metering pump. The procedures in this section must be performed in sequence *without interruption* to properly prime the pump.

IMPORTANT NOTE FOR DUAL-STACKED UNITS: The priming procedures will have to be performed for one burner, and then repeated for the other burner (i.e., get one burner running first before priming the other burner).

Required Tools and Materials

The following tools and materials are required for oil pump priming and should be gathered before starting any procedures:

- 3/8" open-end wrench
- 5/8" open-end wrench
- Rags
- Two containers - minimum 4 liters (1 gallon) each
- Permatex #2 non-hardening gasket sealer
- Adjustable Wrench
- Pipe Wrench

Priming the Metering Pump

ATTENTION: ***The priming process must be done precisely as described in this procedure to ensure that all air is thoroughly bled from the system.*** Failure to bleed all air from the system will result in repeated burner shutdowns requiring reset.

1. Refer to Figure 5A.
2. Remove the 1/4" NPT plug from the side of the pump head and set it aside.
3. Remove the 1/2" brass cap from the 1/2" brass nipple. Place a funnel in the opening. Slowly pour used oil into the funnel ***until oil comes out of the side of the pump head.*** This will fill the oil line, canister filter, and pump head with oil.

   ATTENTION: NEVER run the pump head dry (i.e. without oil in the pump head). Doing so will severely damage the pump.
4. Apply Permatex #2 non-hardening gasket sealer to the threads of the plug (removed from the pump head). Re-install the plug and tighten.
5. Apply Permatex #2 non-hardening gasket sealer to the threads of the 1/2" brass nipple. Re-install the 1/2" brass cap on the brass nipple and tighten.
6. Open the bleeder on the pump two to three (2-3) full turns and position a container to catch oil which will flow from the bleeder during pump priming.
7. Close the mini ball valve at the outlet port of the pump head.

   ATTENTION: Verify that the relief oil line is installed back to the tank before closing the mini ball valve. Closing the mini ball valve will cause the internal pump relief valve to open.

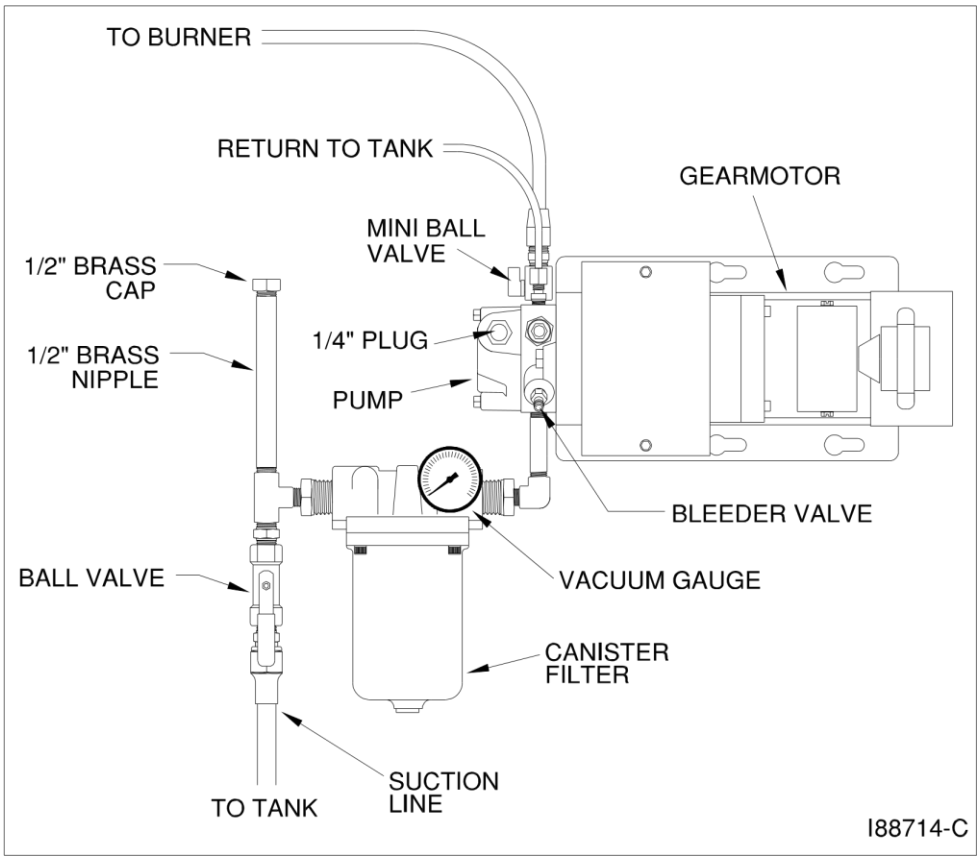

Figure 5A - Priming the Metering Pump

Priming the Metering Pump (continued)

8. **Activating the Pump**

NOTE: The CTBs feature a priming switch which is mounted on the left-hand side of the electrical junction box on the side of the boiler cabinet. The priming switch has two positions:

- **PRIME (switch is in the UP position / orange indicator light is ON):** this is used only for pump priming. When the switch is in the UP position, the pump circuit is activated for priming. The pump will continue to run as long as the switch is in this position. The oil primary control circuit is de-activated so the burner cannot run while the switch is in the UP position.
- **BURNER (switch is in the DOWN position):** this is used for normal burner operation. When the switch is in the DOWN position, the burner controls the operation of the pump. The pump will only run while the burner is running.

a. Refer to Figure 5B to locate the priming switch.
b. Move the priming switch to the UP position. The pump should immediately start running.

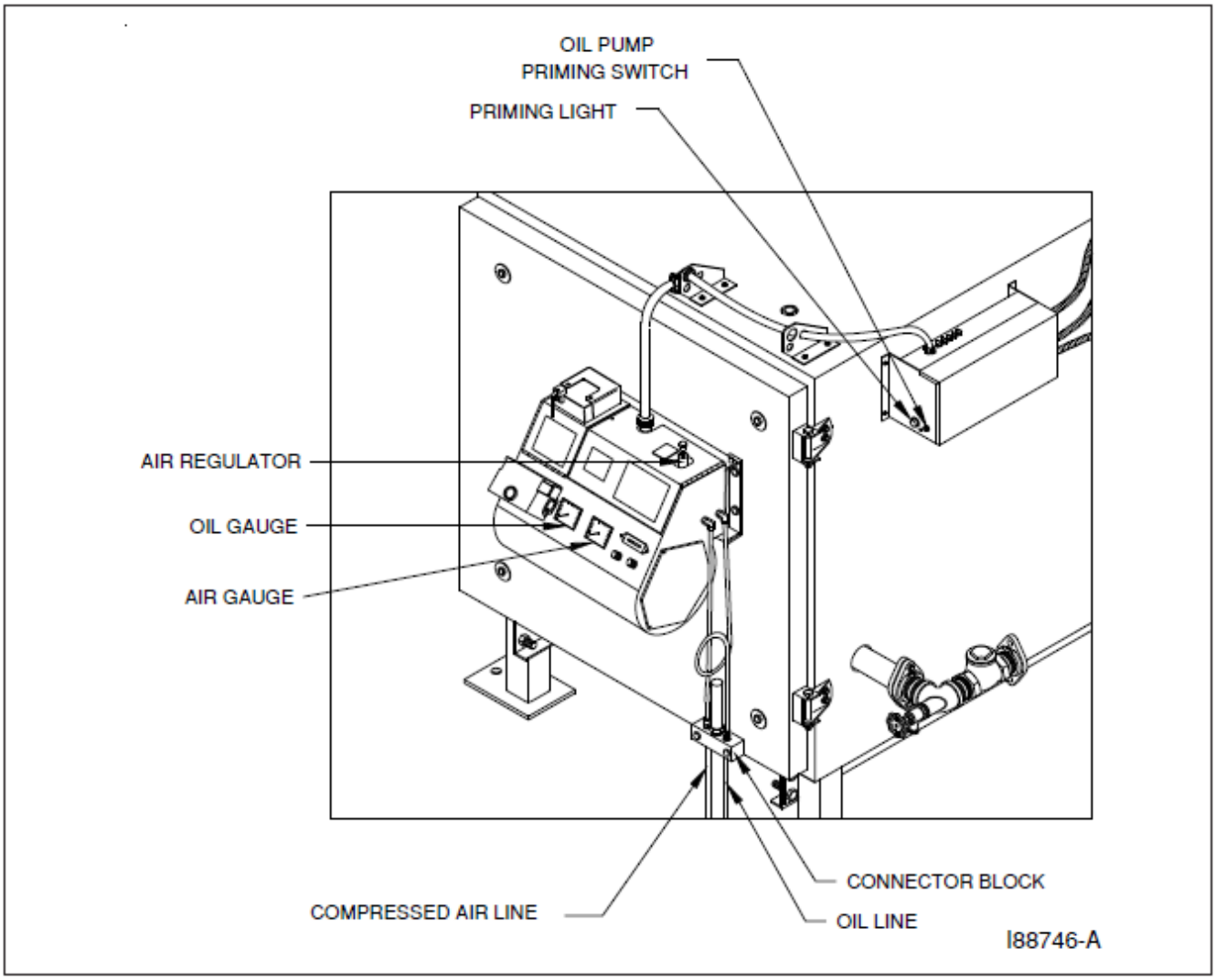

Figure 5B - Detail of Burner Connections/Components

Priming the Metering Pump (continued)

9. Run the pump until a solid stream of oil flows from the pump bleeder. This will bleed all air out of the suction line, oil filter and pump head.
   ATTENTION: For the metering pump to operate correctly, it is very important that the system is entirely full of oil and all air is bled out. The burner will shut down if there is any air in the system.
10. Open the mini ball valve at the outlet port of the pump to allow the pressure oil line to be filled.
11. Close and tighten the bleeder on the pump.
12. Turn the priming switch to the DOWN position so that the pump stops running.
13. Disconnect the pressure oil line from the burner and position a container to catch oil which will flow from the pressure oil line during pump priming.
14. Turn the priming switch to the UP position. The pump should start running immediately.
15. Run the oil pump until the proper flow of oil has been established, and the oil line has been completely flushed out.
16. Turn the priming switch to the DOWN position so that the pump stops running.
17. Re-connect the oil line to the connector block.

Vacuum Testing the Oil Pump

Vacuum testing the oil pump is a very accurate way to determine the following:

- The condition of the pump -- the ability of the pump to pull a vacuum and suck oil from the tank.
- The condition of the fittings, gaskets and seals from the ball valve to the pump -- these components must all be airtight to avoid suction leaks.

The following procedure provides instructions for vacuum testing the pump and canister filter on systems equipped with a ball valve.

ATTENTION: For the pump to pull and hold vacuum, it is critical that all fittings are airtight. If any of these fittings are loose, the pump may not pull a vacuum or may lose the vacuum rapidly. It is also critical that all fittings in the suction line, including fittings on the canister filter, are 100% airtight.

1. Follow the instructions to prime the pump (previous procedure).
   NOTE: The pump will not pull a vacuum if the pump is dry. There must be oil in the gears of the pump before the pump can pull a vacuum.
2. With the pump running, open the bleeder two to three full turns, and make sure that oil is flowing from the bleeder. DO NOT close the bleeder yet.
3. Refer to Figure 5A. Close the ball valve at the inlet to the canister filter. Observe the vacuum gauge. **NOTE:** The ball valve must have a stainless-steel ball and should be pressure tested by the manufacturer. If the ball valve leaks, the vacuum test will not be accurate.
4. The vacuum should increase within 30 seconds to 15 inches of vacuum. When the vacuum gauge reads 15 inches of vacuum, first close and tighten the bleeder, then turn the pump off and close the mini ball valve at the outlet port of the pump. Observe the vacuum gauge.
   NOTE: If the pump will not pull at least 15 inches of vacuum, there is a very serious suction leak, or the pump is damaged.

Vacuum Testing the Oil Pump (continued)

5. If there are no suction leaks, the system will hold a vacuum.
   NOTE: It is acceptable for the vacuum to drop one to five inches within one minute as the seal in the pump seats. The vacuum should then hold steady for 15 minutes.

ATTENTION: If the vacuum drops *more than one to five inches within the first minute*, there is one or more leaks somewhere between the pump and the ball valve. Do the following:

- Wipe your finger along the cylinder at the shaft of the pump. If there is oil here, the pump seal is damaged. Replace the pump.
- Disassemble and clean all the fittings from the pump to the ball valve. Properly seal all fittings with Permatex #2 non-hardening gasket sealer or equivalent. Check the condition of the o-ring on the canister filter and tighten the four canister filter bolts in a crisscross pattern.
- Repeat the procedure to vacuum test the system to ensure that the system is airtight.

6. Follow the instructions to prime the metering pump after a vacuum test has been performed.

SECTION 6: STARTING AND ADJUSTING THE BURNER

Understanding Burner Startup and Adjustment

ATTENTION: Before starting the burner, you must fill the coil tube boiler with water. Refer to Section 10 of this manual for more information on the hydronics system. ***DO NOT bypass the CTB controls to operate the burner!***

FOR DUAL-STACKED UNITS ONLY: Clean Burn recommends that you complete burner startup and adjustment for one burner before starting the second burner.

Starting and adjusting the burner involves a series of separate procedures which must be accomplished in sequence without interruption. Review all the procedures before attempting burner startup and adjustment, paying careful attention to safety information statements.

Preparing the Hydronics System for Burner Startup

The following procedure should be performed prior to burner startup to ensure that all key components of the hydronics system are functioning properly. Ensure that air is purged from the system. If the CTB circulator becomes air-bound, it will not produce sufficient flow to activate the flow switch, and the burner will not start properly.

1. Turn the load temperature controller (i.e. thermostat or aquastat) OFF.
2. Set the operating aquastat (on the CTB) at 82ºC (180ºF).

Preparing the Burner for Startup

1. If you have not already done so, disconnect one side of the jumper wire from the terminal block on top of the control box on the side of the boiler. (This prevents the burner from running.) A wiring diagram is provided in Appendix B.
2. Turn the main power to the CTB ON. The green power light on the burner should come on.
3. Wait at least 15 minutes until the preheater block is thoroughly warmed up. (Feel the back of the burner box to make sure the preheater is working. The proving switch on the preheater block will not allow the burner to start until the block is at least 48ºC (120ºF).

   NOTE: The preheater block will remain warm as long as power is supplied to the burner. If the main power supply is ever turned OFF, you must wait at least 15 minutes until the preheater block is thoroughly warm before starting the burner.

(continued on next page)

Preparing the Burner for Startup (continued)

4. Refer to Figure 6A to locate the air regulator. Loosen the locking nut on the air regulator.
5. Turn the adjustment knob on the air regulator counterclockwise until 1/2" of the threads on the knob are exposed. DO NOT back the knob all the way out. **NOTE:** The air gauge will not show any pressure until the burner starts. Before starting the burner for the first time, it is very important to turn the air regulator completely OFF as described.
6. **Initial Adjustment of the Combustion Air Band:**
   Rotate the combustion air band to adjust it to the appropriate slot opening as listed in the following **Initial Adjustment Charts**. Use a ruler to accurately set the slot opening at the widest section of the slot.

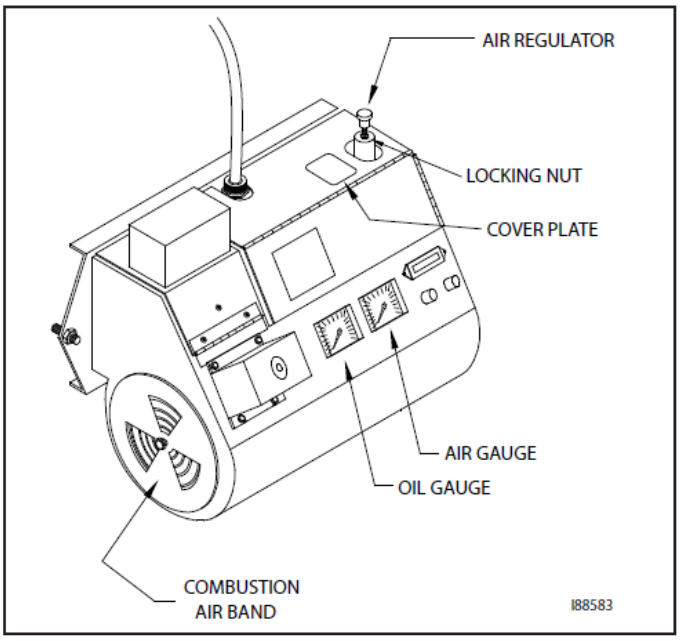

Figure 6A – Component Detail of the CB-500 Series Burner

WARNING: The combustion air band must be properly adjusted to ensure that the burner ignites and burns correctly. DO NOT attempt to start the burner with the combustion air band wide open or completely closed. Failure to heed this warning may result in fire or explosion hazard.

IMPORTANT NOTE: The initial setting of the combustion air band will allow you to start the burner. You will fine tube the setting further as described later in these instructions. The settings shown in the charts below are only the initial adjustments. ***Final adjustments must be done by inspecting the flame length according to the illustrations provided.***

NOTE: ***The oil pressure is automatically adjusted by the metering pump.***

Initial Adjustments for CB-200-CTB-INT
NOTE: Only Gearmotor part # 33530 may be used with the CB-200-CTB-INT (230V/50Hz)

Maximum Input = 59 KW (200,000 BTUH) @ 5.3 LPH (1.4 GPH) *per* CB-500 Series Burner

Oil Type	Oil Pressure/Flame Length	Air Bar	(PSI)	Air Band	Nozzle
#2 Fuel Oil*	*check flame length*	0.8-1.1	(12-16)	10 mm (3/8")	9-5
Used Crankcase Oil	*check flame length*	0.8-1.1	(12-16)	10 mm (3/8")	9-5
Used ATF	*check flame length*	0.8-1.1	(12-16)	10 mm (3/8")	9-5
Used Hydraulic Oil	*check flame length*	0.8-1.1	(12-16)	10 mm (3/8")	9-5
#4 and #5 Fuel Oils	*check flame length*	0.8-1.1	(12-16)	10 mm (3/8")	9-5

Preparing the Burner for Startup (continued)

Initial Adjustments for CB-350-CTB

NOTE: Only Gearmotor part # 33436 may be used with the CB-350-CTB (230V/50Hz)

Maximum Input = 103 KW (350,000 BTUH) @ 9.5 LPH (2.5 GPH) *per* CB-500 Series Burner

#2 Fuel Oil*	*check flame length*	0.8-1.1	(12-16)	12 mm (1/2")	9-5
Used Crankcase Oil	*check flame length*	0.8-1.1	(12-16)	12 mm (1/2")	9-5
Used ATF	*check flame length*	0.8-1.1	(12-16)	12 mm (1/2")	9-5
Used Hydraulic Oil	*check flame length*	0.8-1.1	(12-16)	12 mm (1/2")	9-5
#4 and #5 Fuel Oils	*check flame length*	0.8-1.1	(12-16)	12 mm (1/2")	9-5

Initial Adjustments for CB-500-CTB

NOTE: Only Gearmotor part # 33571 may be used with the CB-500-CTB (230V/50Hz)

Maximum Input = 147 KW (500,000 BTUH) @ 13.5 LPH (3.6 GPH) *per* CB-500 Series Burner

#2 Fuel Oil*	*check flame length*	1 - 1.2	(14-18)	16 mm (5/8")	9-28
Used Crankcase Oil	*check flame length*	1 - 1.2	(14-18)	16 mm (5/8")	9-28
Used ATF	*check flame length*	1 - 1.2	(14-18)	16 mm (5/8")	9-28
Used Hydraulic Oil	*check flame length*	1 - 1.2	(14-18)	16 mm (5/8")	9-28
#4 and #5 Fuel Oils	*check flame length*	1 - 1.2	(14-18)	16 mm (5/8")	9-28

*If you are burning light viscosity oils such as #2 fuel oil, it may be necessary to install a smaller nozzle. Call your Clean Burn dealer for more information.

Starting the Burner

1. Reconnect the control wire. Turn the aquastat to call for heat to start the burner.
   NOTE: If the burner refuses to start, review the ***Preparing the Burner for Startup*** procedure. If, after repeating this procedure, the burner still refuses to start, check the following system components for proper functioning:
   - Verify that the red wire as shown in the **Burner Wiring Diagram** (Appendix B) is energized to 230VAC.
   - Reset the hi-limit switch.
   - If the flow switch is not closing, the circulator is air-locked. Air must be purged from the system.
   - Verify that the prime switch (on the control box) is set to RUN (i.e., DOWN position).
2. **Adjusting the Air Regulator:**
   As soon as the burner starts running, turn the knob on the air regulator clockwise to achieve proper operating air pressure. Refer to the **Initial Adjustment Charts**.
   NOTE: If the safety reset on the primary control is activated and the burner stops running, see Section 7 for further instructions on restarting your burner.

*(**Starting the Burner** procedure continues on the next page)*

Starting the Burner (continued)

3. **Observing the Flame Length:**
Visually inspect the flame length through the observation port. Refer to Figure 6B for an illustration of the desired flame length. The flame should extend no more than one-half of the way down the combustion chamber.

CAUTION
WHEN OPENING INSPECTION PORT

PORT MAY BE HOT
PROTECT HANDS
WEAR SAFETY GOGGLES
KEEP FACE AWAY
OPEN PORT SLOWLY

WARNING: The observation port gets hot as the burner fires. To avoid personal injury, always wear heavy work gloves and safety glasses when opening the port and viewing the flame.

Correct Maximum Flame Adjustment
(Proper Oil and Air Pressure with correct supply of Combustion Air)
- Flame goes half of the way down the combustion chamber.
- Flame does not touch back or walls of combustion chamber.

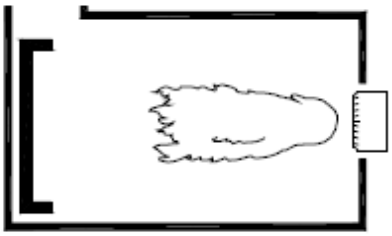

Incorrect Flame Adjustment
(Not Enough Combustion Air):
- Flame must not touch back or walls of combustion chamber.
- Increase combustion air by opening the air band on the side of the burner.

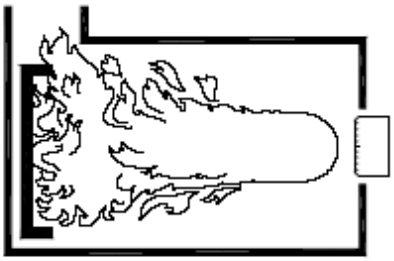

Incorrect Flame Adjustment
(Air Pressure Too High):
- Ensure proper air pressure setting.

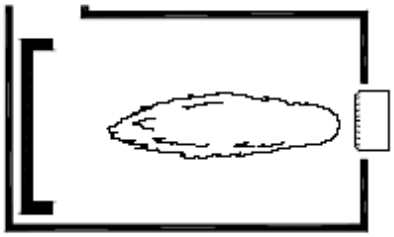

Figure 6B - Flame Length Adjustment

4. Check the flame length after the burner has fired for 15 minutes.
5. Tighten the locking nuts on the air regulator.

Starting the Burner (continued)

6. **Checking for Proper CTB System Operation:**
   Observe the boiler temperature and water pressure.
7. After the burner stops running when the operating aquastat set temperature is reached, check the following:
   - Air has been purged from the water lines.
   - Water pressure is satisfactory (i.e., not greater than 1.5 bar (22 psi). Normal pressure is 0.8 bar (12 psi).
   - All system controls are functioning properly.
8. Reset the operating aquastat to normal operating range, 82-93ºC (180-200ºF) and repeat steps 6 and 7, observing the CTB operation.
9. Reset the load temperature controller (i.e., thermostat or aquastat) to the normal operating temperature.
10. As the CTB temperature drops, the burner will start running. Continue observing the CTB operation through several burner ON/OFF cycles to ensure proper system performance.
11. **Fine Tuning the Combustion Air Band**
    NOTE: The initial setting of the combustion air band may require additional adjustment.
    - Refer to Figure 6A to identify the combustion air band location on the burner.
    - Observe the flame. The flame should be yellow-white with sharp tips and no "sparkles".
    - If the flame is orange in color or the flame length is too long, the oil you are burning requires MORE combustion air. OPEN the air band 3 mm to 6mm (1/8" to 1/4") and re-check the flame for the proper characteristics.
    - Re-check the flame after five minutes. You should see a yellow-white flame with sharp tips and no "sparkles", and the flame should extend half of the way down the combustion chamber.
12. **Checking for a Smokeless Burn:**
    Check for a smokeless burn by observing the stack while the burner is running. If you see any smoke, repeat the previous steps for setting the combustion air band or air intake and adjusting the air regulator. After adjusting the combustion air band, re-check the flame length.

    NOTE: Check for a smokeless burn periodically (as you do the flame length). Immediately readjust the burner if you ever see smoke coming from the stack. Smoke indicates improper air/ fuel adjustment.

    NOTE: When using instruments to adjust the burner for a smokeless burn, the following readings should be achieved:
    - Draft over fire should be -.02 to -04 inches water column (w.c.)
    - Adjust for a smoke spot of a trace to #2
    - For the CB-200-CTB adjust for a CO_2 reading of 10.5 to 12.5% or an O_2 reading of 3 to 5%
    - For the CB-350-CTB adjust for a CO_2 reading of 12 to 13.5% or an O_2 reading of 2.5 to 4.5%
    - For the CB-500-CTB adjust for a CO_2 reading of 12.5 to 14% or an O_2 reading of 2 to 4%
    - Cad cell reading of 200 to 500 ohms

Starting the Burner (continued)

NOTE: On the CB-200-CTB the flame can not be observed through the inspection door. The CB-200-CTB must be adjusted with instruments for proper combustion. Obtain the above settings by adjusting the air band 10 mm (3/8") to 13 mm (1/2"). The metering pump will deliver a constant oil flow and set the flame length.

SECTION 7: RESETTING THE OIL PRIMARY CONTROL

The Oil Primary Control

The oil primary control is a safety device that monitors the flame using a light sensing CAD cell. It will not let the burner start if it detects light when the burner is off, and it will go into safety lockout and shut the burner off when it fails to detect a flame during ignition or detects flame-out during burner operation. The following procedure explains what should be done when this occurs. *It is very important that you follow these instructions precisely when resetting the safety on the primary control and restarting the burner.*

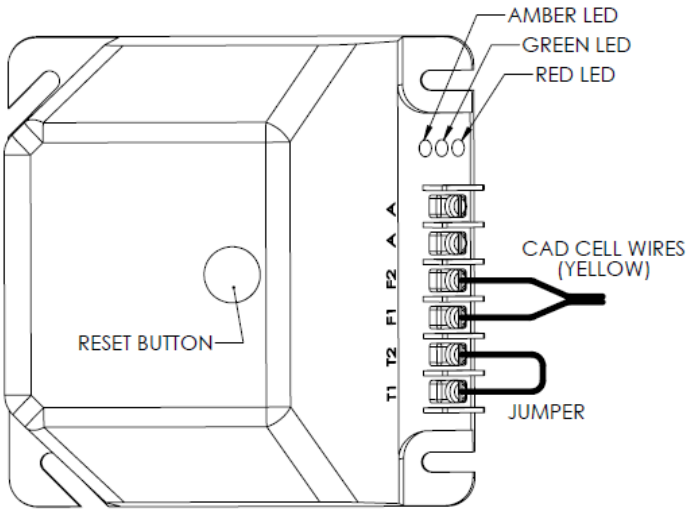

Figure 7A – Oil Primary Control
(See Appendix B for Additional Information)

Resetting the Primary Control

DANGER! DO NOT push the reset button more than once! DO NOT reset the oil primary control if oil mist is present in the combustion chamber or when the combustion chamber is hot! DO NOT operate your CTB if excess oil, oil vapor or fumes have accumulated in or near the unit. As with any oil burning appliance, improper operation may result in a fire or explosion hazard.

1. Refer to Figure 7A.
2. Check the combustion chamber for fuel mist by shining a light through the observation port. If you see fog (fuel mist) in the chamber, DO NOT push the reset button.
3. If the combustion chamber is hot, allow the CTB to cool for at least 30 minutes. DO NOT push the reset button.
4. When all fuel mist has cleared and the CTB has cooled, depress the red reset button on the primary control for two seconds, then release. Reset the control ONCE ONLY.
5. If the burner will not restart, call your Clean Burn dealer immediately.

ATTENTION: *Never* touch a jumper wire from an "F" terminal to a "T" terminal on the oil primary control. This will severely damage your primary control.

SECTION 8: ADJUSTING THE DRAFT OVERFIRE

Understanding the Importance of Draft

Draft in the CTB is created as the hot combustion gases rise up the stack, creating a negative pressure inside the stack and the boiler. This negative pressure is measured as inches of water column (W.C.) of draft. A proper draft overfire of -.02 to -.04 w.c. is essential so that all combustion products travel away from the burner, down the combustion chamber, through the CTB flues and up the stack.

Checking for Correct Draft Overfire

WARNING: Correct draft overfire is *essential* for the proper and safe operation of your CTB.

Your CTB is equipped with an observation/ draft reading port to check draft overfire. *A qualified serviceman with proper equipment must check/adjust your CTB for proper draft.* Contact your Clean Burn dealer for this service.

1. With the burner running and the exhaust hot, insert the probe of the draft gauge instrument into the draft reading port in the observation port as shown in Figure 8A. **NOTE:** Follow the directions with the gauge to use your specific type of gauge.
2. Adjust the barometric damper to achieve the required draft overfire of -0.02 w.c. as shown on the following page.
3. Note the draft overfire reading on the draft gauge and record the reading in the Maintenance Record.
4. If the correct draft overfire cannot be achieved, contact your Clean Burn dealer immediately.

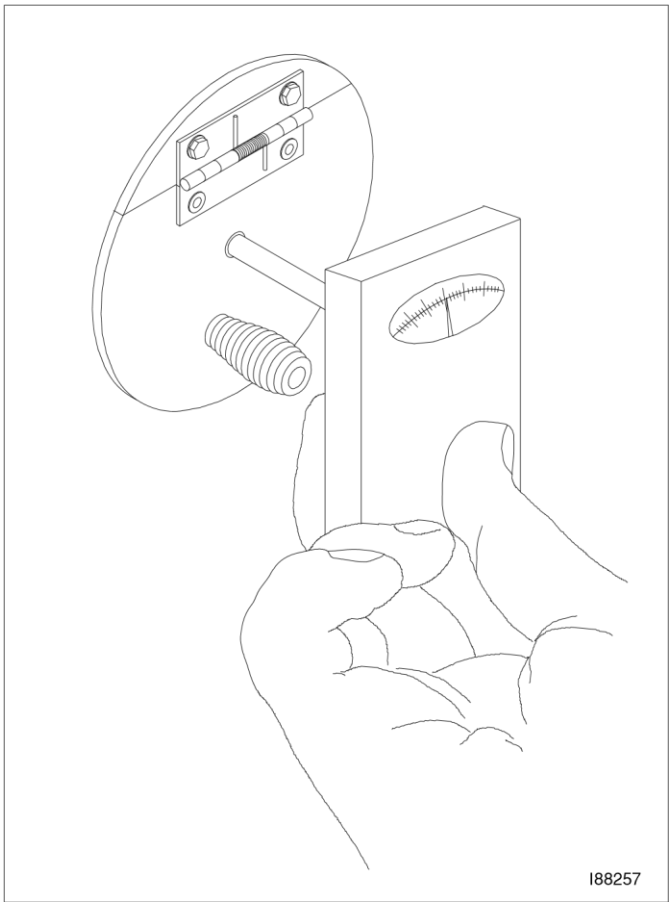

Figure 8A – Checking for Proper Draft Overfire

ATTENTION: The draft reading should be in the -.02 to -.04 w.c. range. Poor draft (i.e. -.01 to +.08) results in back pressure in the CTB and poor burner performance. Too much draft overfire (i.e. *greater than* -.04) sucks the heat from the CTB and results in abnormally high stack temperature.

WARNING! If you cannot achieve proper draft overfire, do not operate your CTB! Contact your Clean Burn dealer for assistance.

Adjusting the Barometric Damper

NOTE: If the draft overfire is not in the -.02 to -.04 inch w.c. range, it is necessary to adjust the barometric damper.

1. Before starting the burner, turn the weight on the flapper COUNTERCLOCKWISE until the flapper remains closed. This will provide maximum draft for the CTB.
2. Follow the directions in Section 6 to start and adjust the burner. Wait at least 10 minutes for the stack to heat up.
3. With the burner running, check the draft overfire with a draft gauge.
4. As shown in Figure 8B, adjust the weight on the flapper to obtain a consistent -.02 inch w.c. draft overfire. Turn the weight COUNTERCLOCKWISE to increase draft (i.e., draft increases as the flapper closes). Turn the weight CLOCKWISE to decrease draft (i.e. draft decreases as the flapper opens).
5. Tighten the locking nut to securely hold the weight in position.

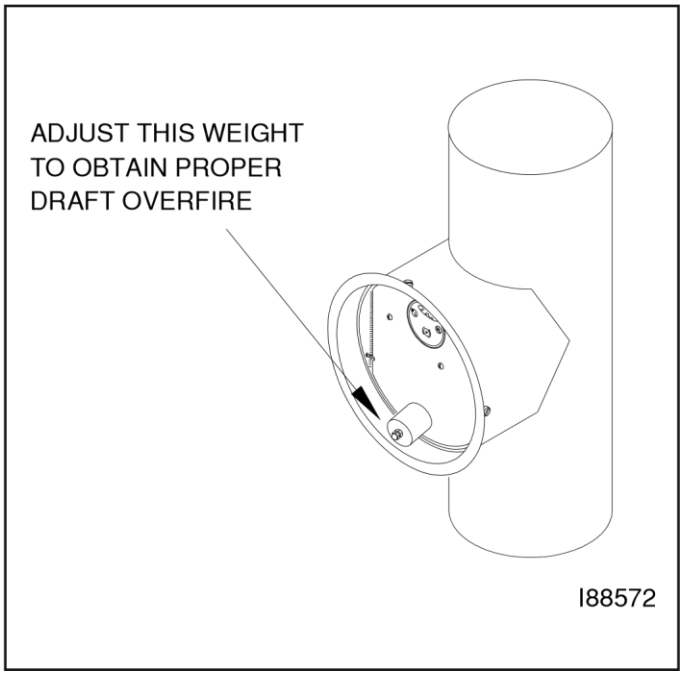

Figure 8B - Adjustment of Barometric Damper

Adjusting Draft Overfire on CTBs with Draft Inducers

NOTE: The draft inducer is purposely sized to create a generous draft. When adjusting the barometric damper, you will find that the flapper is open most of the time. This allows the draft inducer to suck cool air through the damper to protect the inducer motor from heat damage.

1. With the burner running and the stack hot, use a draft gauge to check draft overfire.
2. Adjust the barometric damper to obtain -0.02 w.c. draft overfire. If you still have too much draft, adjust the draft plate on the draft inducer. Move the plate in 6 mm (1/4 inch) to reduce the draft. Recheck the draft reading.

Solving Draft Overfire Problems

CAUTION: Under no circumstances should the equipment room ever be under a negative pressure. Look for exhaust fans, compressors, air handling units, or anything else that may take air away from the boiler. Also look for chemical fumes, solvents, refrigerants, etc. that may be in use around the boiler and cause damage to it.

ATTENTION: Backdraft must be resolved, or your CTB will not operate correctly! Under backdraft conditions, draft overfire readings will show positive pressure in the combustion chamber. ***Backdraft*** *means that oil spray, combustion products, and heat are blown back against the burner. Backdraft results in oil-fouled retention heads and electrodes. Severe backdraft will force heat back against the burner and result in heat damage to the cad cell and transformer.*

Backdraft is caused by the following conditions:

- Poor draft caused by improper stack design. (See Section 4.)
- Poor draft caused by improper adjustment of the barometric damper.
- Incorrect combustion air band setting on the burner. (See Section 6.)
- CTB flues are plugged with ash. (See Section 9.)
- Exhaust fans in your building are sucking gases down the stack.

Understanding the Effect of Exhaust Fans on Draft

Any type of exhaust fan, paint booth, or exhaust system in a building will create negative pressure in the building unless there is a source of make-up air (i.e. fresh air which enters the building and replaces the air removed by the exhaust fans.)

If there is insufficient make-up air, the exhaust fan will suck air and combustion gases down the CTB stack and create backdraft in the CTB. Even if the exhaust fan is on another level of the building or in another room away from the CTB, the exhaust fan can still create backdraft at the CTB.

Checking Draft Overfire to Determine Severity of Backdraft

The following procedure is an accurate method of determining how much backdraft is created by the exhaust fans. Once this is determined, you can select the correct method for resolving the backdraft. Refer to Figure 8C on the following page as needed.

1. Turn off ALL exhaust fans and close ALL doors and windows in the building (any open door or window will allow make-up air to enter the building and will negate the test).
2. Start the CTB and adjust the barometric damper so that the draft overfire is -.02 inch w.c.
3. Check the draft overfire again. Now have someone start the exhaust fans.
4. Note how much the draft overfire has changed.

ATTENTION: If the draft overfire changed towards positive, it is mandatory that make-up air is provided to the building or severe damage to the CTB and burner will occur. If the draft overfire remained constant at -.02 inch w.c., there is sufficient make-up air entering the building, and the exhaust fan is not adversely affecting the draft.

Installing a Make-up Air Louver

Exhaust Fans and Make-up Air Louvers

When exhaust fans are operated in tight buildings, there is little or no source of fresh air to replace the air removed from the building by the exhaust fan. This results in negative pressure (vacuum) in the building which creates severe backdraft problems at the CTB.

Properly sized make-up air louvers are designed to allow adequate fresh air to enter the building during operation of the exhaust fans. The louvers automatically open under the vacuum created by the exhaust fans. The louvers open just enough to provide the correct amount of fresh air. The louvers automatically close when the exhaust fans are turned off.

Sizing the Make-up Air Louver

IMPORTANT NOTE: When using louvers and grills and the actual free area of the louver or grill is not known, assume that wooden louvers/grills will have a free area of 25%, while metal louvers/grills will have 75%. ("Free area" is the actual space allowing air to flow through.)

Procedure 1:
(a) Determine the CFM rating of the exhaust fan. This information should be stamped on a label on the exhaust fan. Make sure to add up the total CFM if more than one exhaust fan exists in the building.
(b) Select the correct size of make-up air louver to provide the required CFM of fresh air.

If you cannot determine the CFM rating of the exhaust fan, use the following procedure.

Procedure 2:
(a) Count the total number of exhaust fans in the building.
(b) Close all of the doors and windows in the building *except* one overhead garage door.
(c) Start the CTB and allow it to run for 15 minutes to bring it up to temperature.
(d) Set the draft-over-fire for -.02" to -.04" W.C.
(e) Turn ON all of the exhaust fans in the building.
(f) Now close the opened overhead garage door *slowly,* just until the draft gauge moves down into a positive (+) draft reading; as soon as it reaches this point, STOP the door at that position.
(g) Slowly open the door back up, just until the draft reading comes back up to the -.02"to -.04 W.C.
(h) Measure the size of the door opening.

Example of Calculations for Sizing Make-up Air Louver
Measured door opening: 366 cm (144") wide x 30 cm (12") high.

- Calculate open area - in this case it equals 10,980 cm^2 (1728 in^2)
- Multiply by 1.1 correction factor (10,980 cm^2 x 1.1 = 12,078 cm^2)
- Multiply by free area factor (12,078 cm^2 x 1.25 = 15,098 cm^2
- Refer to sizing chart on the following page - required grill size would be:
- 137cm x 137cm (54in. x 54 in.) grill

Installing a Make-up Air Louver (continued)

CALCULATED OPENING SIZE		REQUIRED LOUVER / GRILL SIZE	
cm^2	in^2	cm	in
0 – 528	0 – 82	25 x 25	10 x 10
529 – 836	83 – 130	30 x 30	12 x 12
837 – 1,445	131 – 224	41 x 41	16 x 16
1,446 – 1,923	225 – 299	46 x 46	18 x 18
1,924 – 2,390	300 – 370	51 x 51	20 x 20
2,391 – 3,166	371 – 490	61 x 61	24 x 24
3,167 – 4,769	491 – 739	76 x 76	30 x 30
4,770 – 7,150	740 – 1109	91 x 91	36 x 36
7,151 – 9,182	1,110 – 1,424	107 x 107	42 x 42
9,183 – 12,355	1,425 – 1,915	122 x 122	48 x 48
12,356 – 15,499	1,916 – 2,400	137 x 137	54 x 54
15,500 – 19,650	2,401 – 3,045	152 x 152	60 x 60

Installing the Make-up Air Louver

All louvers and grills, regardless of the material from which they are made, must be FIXED in the OPEN position OR be interlocked with the appliance so that they will open automatically during the operation of the appliance. The interlock must be placed on the driven member.

NOTE: It is very important to follow these instructions carefully to ensure proper performance of the louver.

1. The louver must not be close to the CTB. The fresh air should travel at least 12 to 15 meters (40 to 50 feet) before reaching the CTB, so the air warms up. The CTB will not heat well if it is receiving cold return air.
2. The louver must be high in the sidewall of the building so the cold fresh air does not blow across the floor level and chill the service personnel.
3. The louver should be installed in the opposite wall from the location of the exhaust fan. This will quickly vent diesel exhaust from the top of the building and reduce the amount of run time for the exhaust fan.

SECTION 9: MAINTENANCE

Understanding Maintenance

Servicing your Clean Burn CTB in a timely manner is very important to keep it running in peak condition. Just as an automobile requires periodic maintenance such as oil changes, engine tune-ups, etc., your Clean Burn CTB also requires regularly scheduled service.

WARNING: *Failure to maintain and/or improper servicing by unqualified personnel may adversely affect the proper, safe operation of your CTB, and may reduce the service life of your boiler and void the warranty.*

The following chart summarizes all the service intervals which are required to maintain your CTB. Service instructions/procedures for these activities are included in this chapter.

Maintenance Activity	Interval
Cleaning the canister filter	Before vacuum gauge reads 10" HG of vacuum
Servicing the metering pump	At least once a year
Cleaning the check valve/screen	At least once a year
Cleaning water/sludge out of oil tank	At least once a year
Cleaning out ash (CB-200-CTB)*	Approx. every 750 hrs. per burner hour meter
Cleaning out ash (CB-350-CTB)*	Approx. every 1000 hrs. per burner hour meter
Cleaning out ash (CB-500-CTB)*	Approx. every 1000 hrs. per burner hour meter
Checking boiler water condition	Periodically by qualified water treatment company
Annual burner tune-up	At least once a year

***It is very important to clean ash from the CTB on schedule.** Normal use of the boiler requires clean-out at least twice during the heating season. Heavy, around-the-clock usage requires more frequent clean-out. For instance, *one month* of continual running of the CTB is *720 hours* (24 hours x 30 days = 720 hours).

NOTE: *IMPORTANT!* Record all maintenance activities in the Maintenance Record provided in the Appendixes.

Periodic Burner Inspection

Following initial start-up of the burner, you should inspect the operation of the burner periodically--ideally monthly. Doing so ensures that the system is functioning efficiently and safely.

Follow these guidelines for inspecting the operation of the burner:

- Visually inspect the flame length through the observation port. The flame should extend no more than one-half of the way down the combustion chamber.
  - If the flame is diminishing or displays wide variations, clean the canister filter and check valve/screen (procedures provided in this section).
  - If the flame is firing too strongly (i.e. flame touches back and/or side walls of the combustion chamber), check the air pressure setting (see following guideline).
- Check the air pressure by observing the air gauge; proper air pressure settings are provided in Section 6. DO NOT overfire the burner; doing so on a continual basis will damage the CTB.
- Check the combustion air band setting for the proper opening and clean away any dust/debris as necessary. Note that the air band should NEVER be set fully open or closed.
- Check the draft over fire reading as specified in Section 8.

CAUTION
WHEN OPENING INSPECTION PORT

PORT MAY BE HOT
PROTECT HANDS
WEAR SAFETY GOGGLES
KEEP FACE AWAY
OPEN PORT SLOWLY

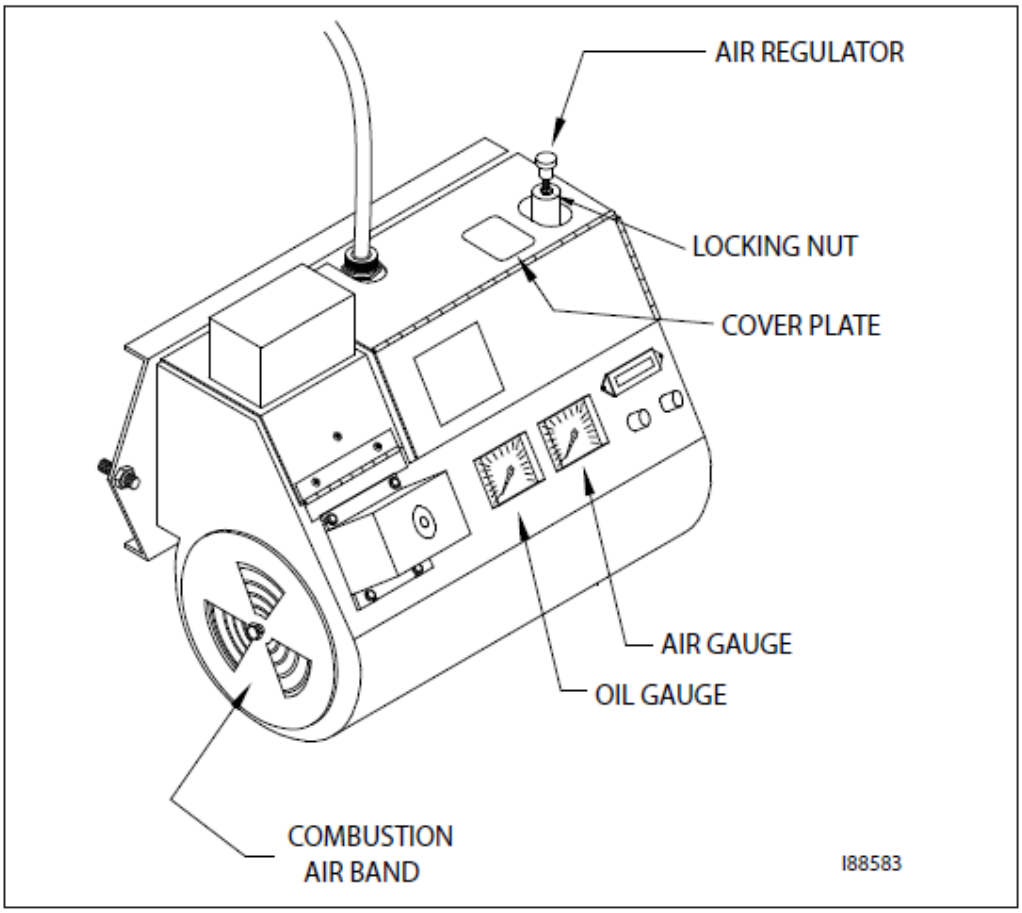

Figure 9A - Component Detail of the CB-525-S2 Burner (CB-550-S2 is similar)

Cleaning the Canister Filter

ATTENTION: Never operate your CTB with more than 10" HG of vacuum on the suction side of the pump. High vacuum separates air from the oil and results in erratic burner operation.

The following protective gear should be worn when cleaning the filter:

- Rubber gloves
- Safety goggles

1. Close the ball valve adjacent to the filter.
2. Position a container under the filter.
3. Unscrew the four bolts to drain the oil from the canister.
4. Remove the canister bowl.
5. Clean the screen and the bowl in a parts washer.
6. Referring to Figure 9B, examine the filter components as you reassemble them.
7. Check the condition of the O-rings. Replace any that are cracked or worn.
8. Ensure that the canister filter is 100% airtight by firmly tightening the four bolts.
9. Open the ball valve. Refer to Sections 5 and 6 for instructions on priming the pump and starting the burner.

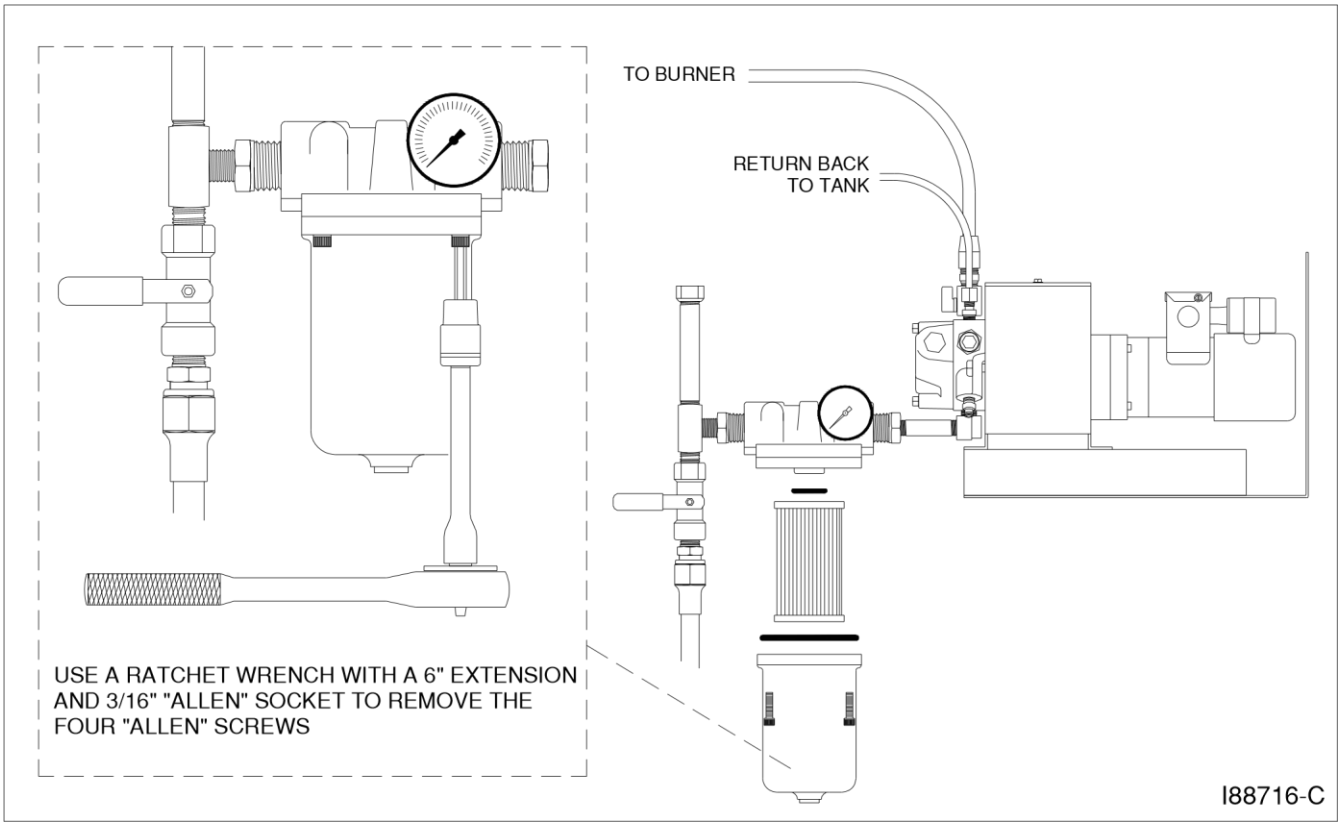

Figure 9B - Canister Filter Component Detail

Servicing the Metering Pump

1. Refer to Figure 9C.
2. Remove the pump head cover (part 1).
3. Remove the screen (part 2) and wash it.
4. Remove and discard the used gasket (part 3).
5. Install a new gasket (Clean Burn Part #32422).
6. Replace the screen and pump head cover.

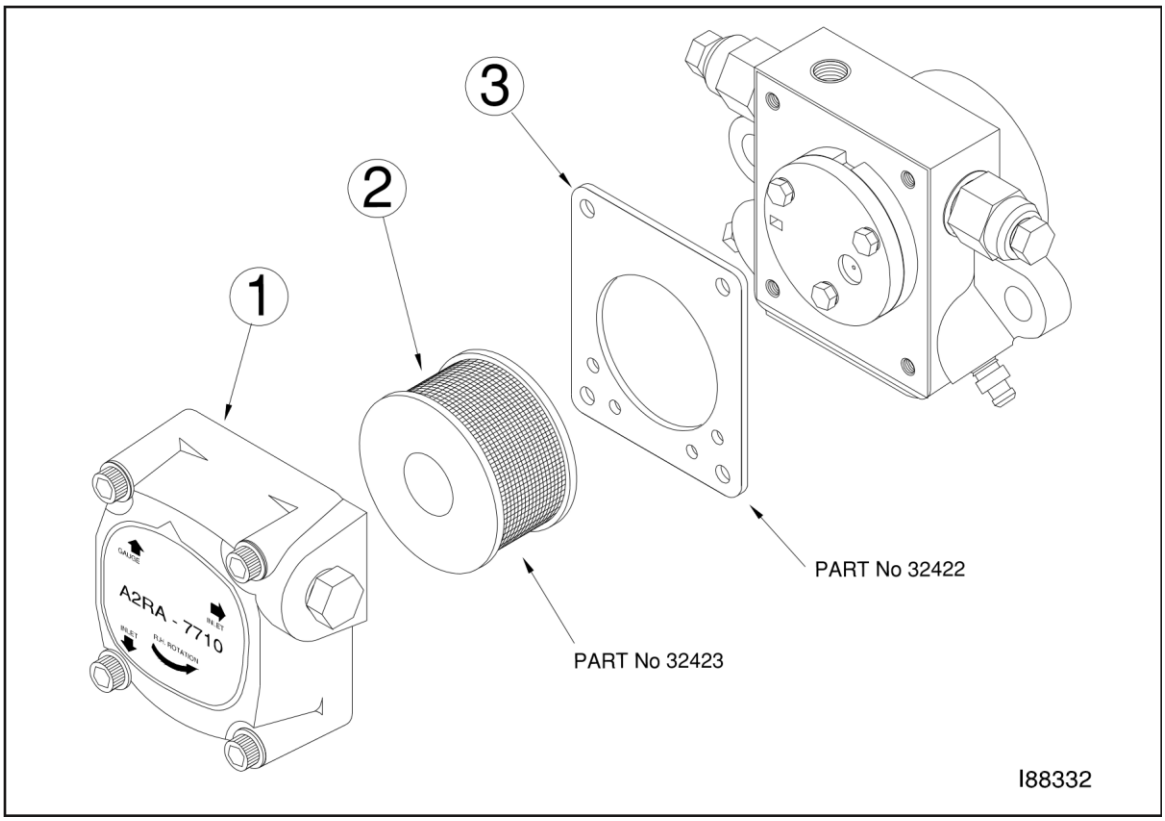

Figure 9C - Servicing the Metering Pump

Cleaning the Check Valve / Screen

This procedure applies to CTB installations with inside and outside tanks. The following protective gear should be worn when cleaning the check valve/screen:

- Rubber gloves
- Safety goggles

1. Refer to Figure 9D. Remove the one-piece suction oil line from the tank.
2. Remove the check valve and filter. Clean these components in a parts washer.
3. Check the operation of the check valve. The valve must seat so it is airtight to hold pump prime.
4. Re-assemble and re-install the components. Apply Permatex #2 non-hardening gasket sealer or equivalent to the threaded fittings. Firmly tighten all connections so the suction line is 100% airtight.
5. Follow pump priming instructions in Section 5 to re-establish prime.

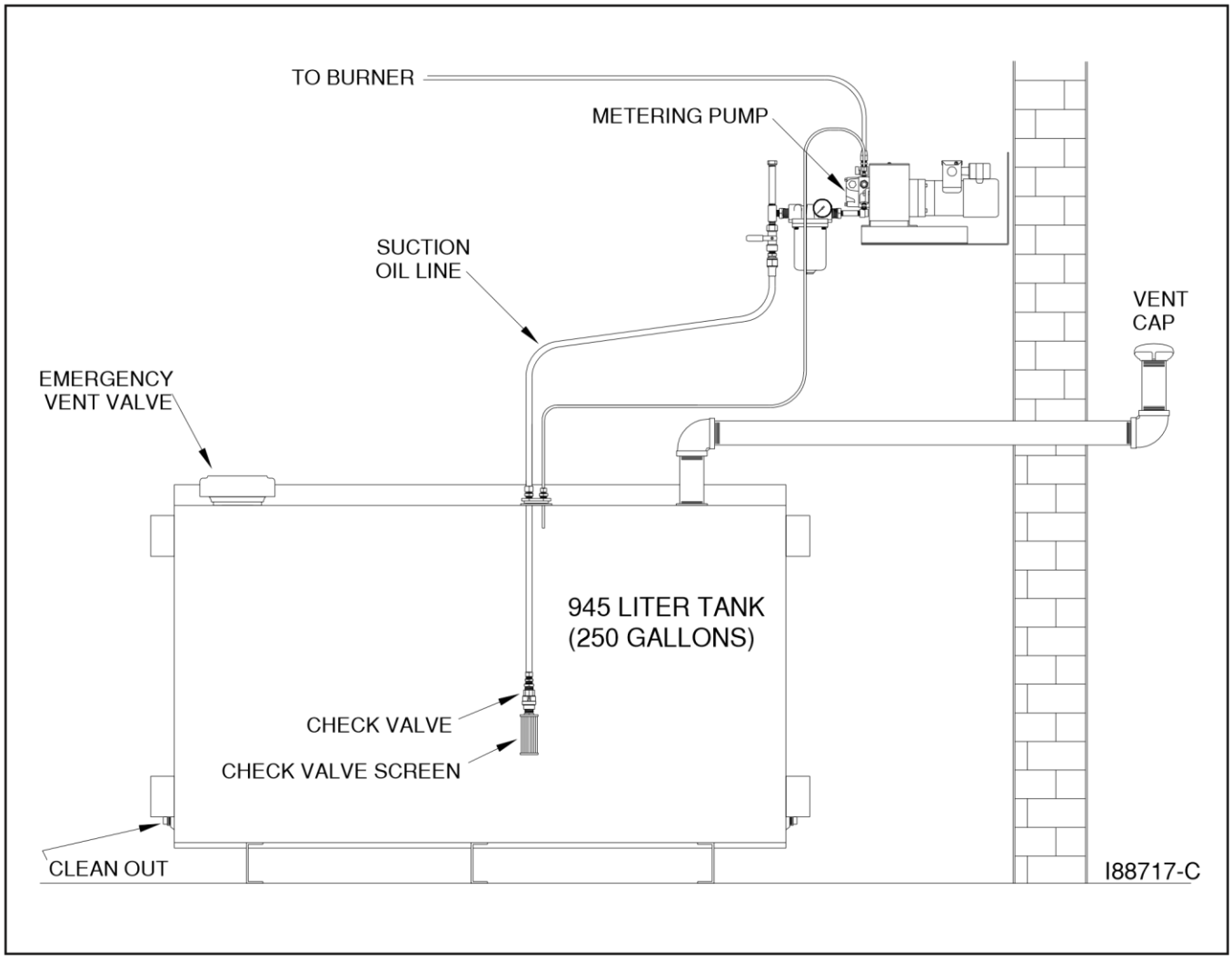

Figure 9D - Check Valve Detail

Cleaning the Oil Tank

DO NOT allow water, sludge, or other debris to accumulate in your oil supply tank to the point that noncombustible or harmful materials are drawn into the pump or burner.

Drain water and sludge from the bottom of your tank at least once a year, and more frequently with water accumulation.

NOTE: If your used oil tank has not been cleaned on a regular basis, a considerable amount of sludge, etc. may have accumulated on the bottom of the tank. Under these circumstances, it is advisable for you to hire your used oil hauler to pump the tank. Make sure the tank is pumped to the bottom to remove all sludge, etc. from the tank (your used oil hauler may charge an additional fee for this type of service). The best time to pump the used oil tank is at the end of the heating season when the tank is low. This allows sufficient time to refill the tank with used oil (generated by your company over the summer months) so that you have adequate fuel for the heating season.

Cleaning Ash from the Coil Tube Boiler

ATTENTION: Your CTB may require frequent clean out of the ash due to contaminants in the oil or heavy use. As ash accumulates, CTB heat output declines, and the stack temperature rises. 3 mm (1/8") of ash has the insulating capacity of 2.5 cm (1") of fiberglass insulation and reduces heat transfer significantly. Never allow more than 6 mm (1/4") of ash to accumulate in the combustion chamber heat exchanger flues or stack.

The following protective gear should be worn when cleaning the ash:

- Respirator for fine particles
- Safety goggles
- Rubber gloves
- Protective clothing

1. Ensure that power has been turned OFF, and all "hot" components have been allowed to cool sufficiently. Shop air should be turned OFF and disconnected. Allow at least one hour for the ceramics to cool.
2. Clean the ash from the combustion chamber (see Figure 9D):
   a. If the air and oil lines must be disconnected to open the clean outdoor:
      (1.) Bleed-down pressure on the air and oil lines by slightly loosening the fittings at the bottom of the connector block.
      (2.) With air and oil pressure completely bled off, disconnect the air and oil pressure lines from the bottom of the connector block.
      NOTE: Cover these lines to keep dirt from entering the air/oil supply.
   b. Remove the lock nuts on the clean-out door.
   c. Carefully swing open the clean-out door to expose the coiled heat exchanger, flue passages, and the combustion chamber.
   d. Remove the two ceramic sleeve half-pieces from the combustion chamber, and remove the supporting ceramic stand pieces.
   e. Use a wire or bristle brush to thoroughly clean out the ash from the combustion chamber and flue passages.
   f. While cleaning out the combustion chamber, also check the burner retention head and throat. Carefully clean these elements.

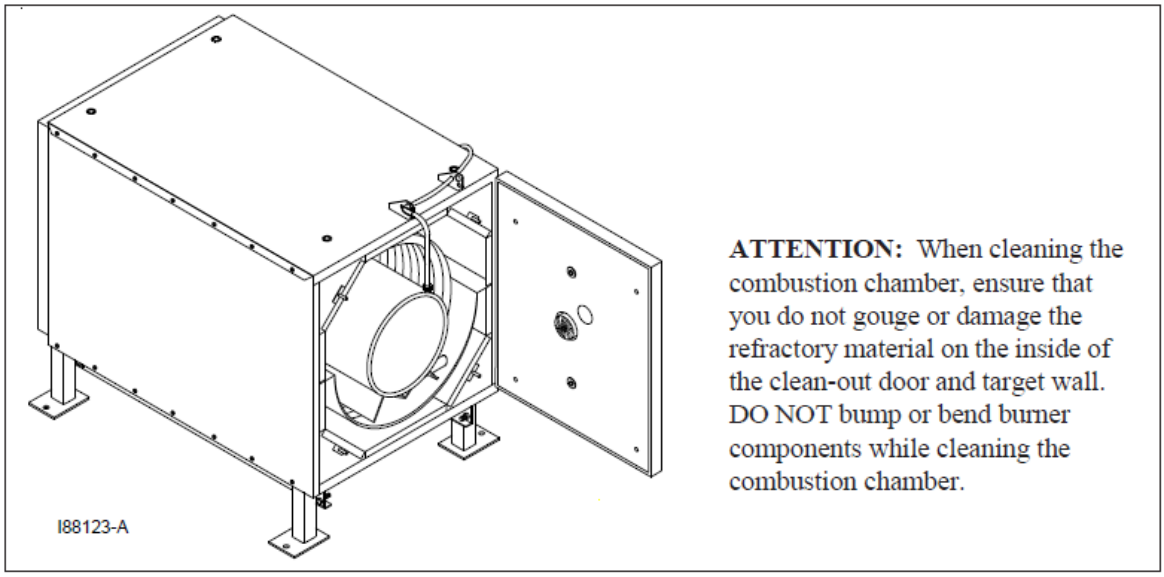

Figure 9E - Accessing the Combustion Chamber for Cleaning

Cleaning the Ash (continued)

2.(cont.) h. Thoroughly vacuum any remaining ash residue from the flue passages. A long wand on the hose of your shop vac is helpful in reaching all the way back.

i. Inspect the combustion chamber and its components to ensure that it is in good condition. Inspect the inside of the clean-out door and target wall. Make sure the refractory material on the inside of the door is in good condition, and the door seals tightly when closed. If the door does not seal tightly, replace any damaged components.

3. Clean the ash from the stack components:
   a. Brush accumulated ash from the stack cap.
   b. Lightly tap the stack components to loosen the ash.
   c. Allow ash and dust to settle in the clean-out tee or elbow, then vacuum out.
   d. Disconnect the stack from the CTB breach.
   e. Thoroughly vacuum out the back of the boiler, including the boiler breach (through the breach). If desired, the back panel can be removed for cleaning.

ATTENTION: When handling the front door and rear panel, be careful that you do not damage the insulation seal surfaces. Two technicians may be required to remove and install the rear panel safely. The panel weighs approximately 39 Kg (85 lbs).

4. Reassemble the boiler components (ceramic stand, ceramic sleeve, back panel, etc.). If necessary, refer to Section 3 for additional Assembly information.
5. Close the clean-out door, install and tighten the washer and nuts. Make sure that the clean-out door and rear panel close and seal properly. Reconnect all disconnected lines (oil and air) on the bottom of the connector block.

NOTE: You may need to bleed air from the oil line before starting the burner. See Section 5 for pertinent instructions.

Cleaning and Maintaining the Draft Inducer

The Draft Inducer will require periodic maintenance to ensure that the fan blades do not accumulate excessive ash which can create vibration, noise, and motor wear.

1. Ensure that power has been turned OFF, and all "hot" components have been allowed to cool sufficiently.
2. Disconnect the wires from the draft inducer and remove it from the stack penetration.
3. Clean the fan blades with a scraper and wire brush.
4. Oil the draft inducer motor according to the manufacturer's recommendations.

Annual Burner Tune-up

Your Clean Burn CTB requires annual periodic maintenance. The burner requires an annual tune-up -- similar to an automotive tune-up--to keep it running in peak condition. *The burner tune-up should be performed by a qualified Clean Burn service technician who has the necessary parts and expertise.*

Contact your local Clean Burn dealer to schedule the annual periodic maintenance which is usually (preferably) performed during warm weather to prepare the CTB for the next heating season. Various levels of service are provided to fit your particular need.

End of Season Maintenance

ATTENTION: Turn main power to your CTB OFF at the end of the heating season. This will prevent the oil from being "cooked" in the pre-heater block when it is not in use. Failure to do so may result in carbon build up in the burner preheater block which will block oil flow.

ATTENTION: Regulations allow your used oil to be burned only for "heat recovery." DO NOT operate your CTB during warm weather just to burn oil, or severe damage to the combustion chamber/heat exchanger may occur.

Contact your local Clean Burn dealer to schedule your annual burner tune-up. Allow only trained, authorized service personnel to service your burner.

NOTE: If the CTB is not used during the cold-weather months, it must be protected to prevent damage from freezing temperatures.

SECTION 10: THE CTB HYDRONIC SYSTEM

Understanding the CTB Hydronic System

The Clean Burn Coil Tube Boiler (CTB) is designed to function as a low-mass boiler (i.e. it will not maintain boiler water temperature when there is no call for heat). ***Low-mass boilers require that a sufficient, constant flow of water be maintained through the coil*** in order to: (a) remove the heat from the boiler when the burner is firing AND (b) prevent the flow switch from shutting off the burner.

IMPORTANT NOTE: When designing the system layout and application for your CTB, keep in mind that it is NOT suitable for open systems. The Clean Burn CTB has been designed to operate as a closed loop boiler system. Potable water heating (i.e. for domestic or washing purposes) can be accomplished by incorporating a heat exchanger into the system.

Special Safety Guidelines for the Design and Installation of Hydronic Systems

Adhere to the following ***Safety Guidelines*** when designing and setting up the CTB hydronics system:

- The CTB must be installed on non-combustible flooring.
- The CTB must be installed in accordance with national, state, and local plumbing, heating, and electrical codes and the regulations of the serving utilities which may differ from this manual. Authorities having jurisdiction should be consulted before installations are made. In all cases, reference should be made to all applicable standards.
- The heating system must be designed by a competent hydronics contractor, and only persons knowledgeable in the layout and installation of hydronic heating systems should install this boiler.
- The boiler must be connected to an approved chimney in good condition. Serious property damage could result if the boiler is connected to a dirty or inadequate chimney. The interior of the chimney flue must be inspected periodically through the heating season for any obstructions. A clean and unobstructed chimney flue is necessary to allow noxious fumes that could cause serious injury to vent safely and will contribute toward maintaining the boiler's efficiency.
- It is the responsibility of the installing contractor to see that all controls are correctly installed and are operating properly when the installation is completed.
- To ensure optimum performance, qualified personnel must perform proper and timely maintenance on the CTB according to the procedures provided in Section 9 of this manual.

CTB System Function and Configuration

Water Flow and Temperature
The Clean Burn Coil Tube Boiler design requires continuous water flow through the boiler heat exchanger to ensure proper system operation. The boiler circulator must be capable of developing sufficient (head) pressure to overcome the resistance of the boiler plus the circulating system at the required flow rate. If the water flow through the boiler is too low, the flow switch will not allow the burner to operate. (Refer to Appendix A, as needed, for CTB system specifications.)

Heating systems using zone valves, zone pumps, or three-way valves may experience reduced water flow through the boiler. This condition can cause excessive water temperature rise and unstable boiler operation. The normal temperature rise across the boiler is 11ºC(20ºF). **The Minimum operating temperature for the CTB is 71ºC (160ºF).** To avoid condensation, the return water temperature should not fall below 60ºC (140ºF).

System Pressure
The Clean Burn CTB is designed to operate in closed, pressurized hydronic systems. Certain levels of pressure are required for proper system operation--**a minimum of 0.8 bar (12 PSI) should be maintained on the system where the boiler supply water temperature is 93ºC (200ºF) or less.** If a higher working pressure is required, contact the Clean Burn Service Department for proper pressure requirements.

Sample System Configuration: Primary/Secondary Pumping System
A sample hydronic system setup using Clean Burn Coil Tube Boilers is shown in Figure 10A. This system, a ***Primary/Secondary Pumping System,*** allows for many special hydronic requirements (e.g., water return temperatures below the normal 60ºC (140ºF), variable flow zones, multiple zones, multi-temperature systems, and/or multiple boilers) and provides maximum flexibility while maintaining optimal system functioning. **A critical advantage of this type of system is that it dramatically reduces the danger of thermal shock to the boiler.**

In a Primary/Secondary Pumping System (as shown in Figure 10A), the primary loop circulator runs when any of the zones call for heat. In some system setups, the circulator may run continuously during the heating season. The circulator pushes hot water past the zone tees. Any of the secondary zone pumps can draw hot water out of the first tee (as though the tee were a boiler). Each zone then returns cooler water through the second tee where it mixes with the hot water being pushed through by the primary loop circulator. **The close positioning of the two zone tees is crucial to the operation of the system. The tees must be at least 15 cm (6") but not more than 31 cm (12") apart.** This allows for circulators of different flow rates to be used in the same system while maintaining proper flow and functioning.

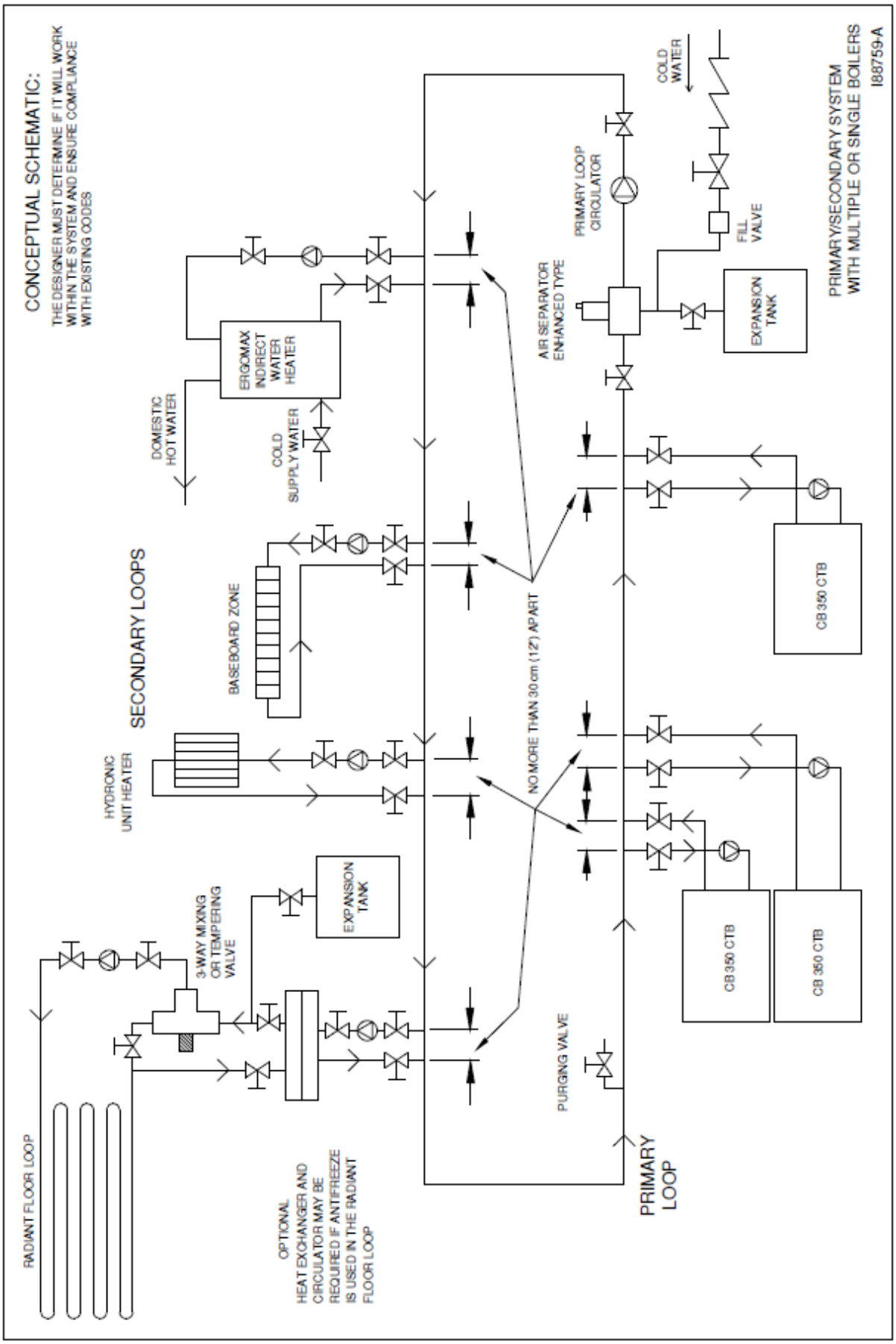

Figure 10A - Sample Primary/Secondary Hydronic System Diagram

CTB Setup Options

When designing and setting up the CTB Hydronic System, please be aware of the following options and special setup requirements:

(1) ***The boiler circulator (which you may have ordered from Clean Burn for your CTB system) is sized to ensure a flow of water through the coil tube ONLY.*** It is NOT sized to be used as a system circulator. An additional circulator must be installed to flow water through the system and to the boiler.

(2) ***In low load conditions,*** Clean Burn recommends the installation of a larger storage tank next to the CTB to extend the run time and to reduce the occurrence of short cycling. Position the tank close to the boiler to reduce the required connective piping as shown in sample configuration, Figure 10B.

(3) ***If hot water is required in the system installation for washing or other related activities,*** Clean Burn offers **Ergomax Heat Exchangers/Storage Tanks in 182, 273, and 450 liter sizes (48, 72, and 119 gallon sizes)**. Contact your local Clean Burn representative for additional details on these CTB system components. Refer to Figure 10C for a sample system configuration using an Ergomax Heat Exchanger. This configuration is ideal for installations requiring pressure washing, car/truck washing, etc. The Ergomax unit works well with a CTB because it stores boiler water in the tank and acts as a buffer (tempering) tank while enabling reduction of short cycling.

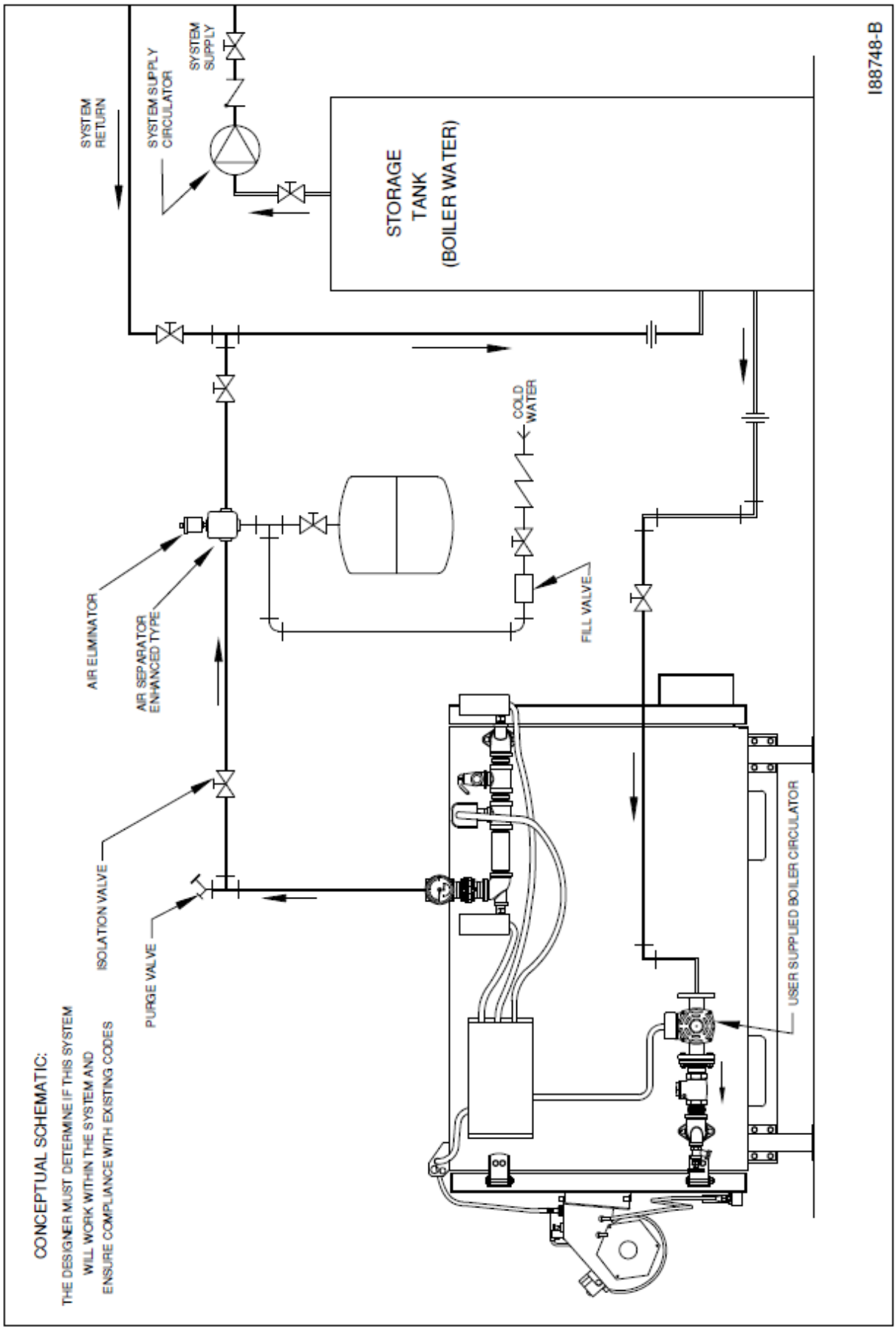

Figure 10B - Model CB-350-CTB with Additional Larger Storage Tank

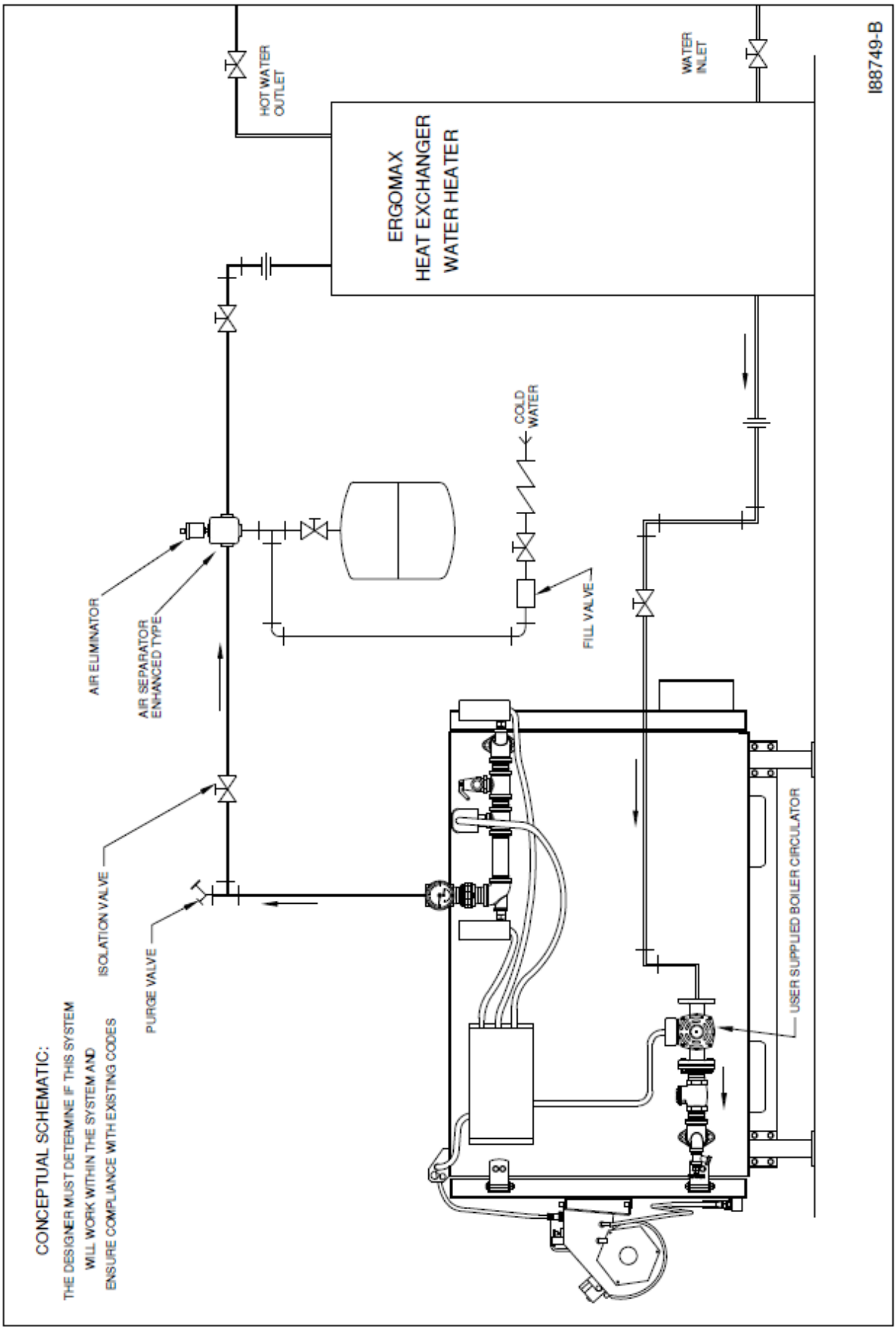

Figure 10C - CB-350-CTB with Ergomax Indirect Water Heater

Guidelines for CTB Setup and Operation

1. Refer to the appropriate illustration in this section for your CTB system configuration, as well as Figures 4A/4B in the Installation chapter.
2. Connect the supply and return piping to the heating system. (See additional information in Section 4).

   CAUTION: Hot water pipes shall have clearances of at least 13 mm (1/2") from all combustible surfaces. For additional technical reference material, see I=B=R Installation and Piping Guide No. 200.
3. The relief valve must be installed with the spindle in the vertical position. The relief valve discharge pipe must be extended to within four inches of the floor or to a drain.
4. To reduce the amount of cold water returned to the boiler (and to protect the boiler from thermal shock), a return blend loop should be utilized.
5. Fill the entire heating system with water and vent air from the system according to the following instructions:
   (a) Close the isolation valve in the boiler supply piping.
   (b) Isolate all circuits by closing the zone valves or balancing valves.
   (c) Attach a hose to the purge valve located just below the isolation valve in the boiler supply piping.
   NOTE: Ensure that the end of the hose drains into a bucket located in a drain area or outside.
   (d) Starting with one circuit, open the first zone valve ONLY.
   (e) Open the purge valve.
   (f) Open the fill valve (the make-up water line should be located on the system side of the isolation valve in the boiler supply piping.)
   (g) Allow water to overflow from the bucket until discharge from the hose is bubble-free.
   ATTENTION: Air in the hose may cause the hose to "jump" and water to spray out; ensure that the area (and equipment nearby) is protected from any possible water damage.
   (h) Open the zone valve to the second zone to be purged, then close the first. Repeat this step until all zones have been purged, but always have one zone open. At completion, open all zone valves.
   (i) Close the purge valve, continue filling the system until the pressure gauge reads 0.8 bar (12 psi). Close the fill valve.
   NOTE: If the make-up water line is equipped with a pressure reducing valve, the system will automatically fill to 0.8 bar (12 psi).
   (j) Open the isolation valve in the boiler supply piping.
   (k) Remove the hose from the purge valve.
   (l) As soon as the boiler is filled, heat the water in the boiler to 82ºC (180ºF) to de-aerate the water.

Guidelines for Preventing Oxygen Contamination

ATTENTION: Oxygen contamination of boiler water will cause corrosion of iron and steel boiler components, and can lead to boiler failure (and void warranty). Causes of oxygen contamination include:

- Addition of excessive make-up water as a result of system leaks
- Absorption through open tanks and fittings
- Oxygen permeable material in the distribution system

To ensure optimal CTB maintenance and operation, follow these recommendations to eliminate damaging oxygen contamination:

- Repair system leaks to eliminate the need for the addition of make-up water.
- Eliminate open tanks from the system.
- Eliminate and/or repair leaky fittings.
- Use non-permeable materials in the distribution system.
- Isolate the boiler from the water heater system (i.e. wash and potable waters) by installing a heat exchanger.

Guidelines for Initial Cleaning of the Hydronics System and Maintaining Water Quality

- Clean the boiler with an alkaline cleaner (e.g. soda ash or detergent) as recommended by a qualified water treatment company.
  NOTE: This is necessary to remove oil or other coatings from the tube surfaces. These protective coatings are commonly applied to new tubes to prevent rusting during storage/transit and will cause corrosion if left on the tubes during operation of the boiler.
- After cleaning the boiler, drain the system in a safe manner to a location that hot water can be discharged safely.
- Remove plugs from all available locations and wash the water side of the boiler as thoroughly as possible using a high-pressure water stream.
- Refill the system with fresh water.
- Test the pH of the water in the system. The pH should be higher than 8.5 but lower than 9.5. Add appropriate boiler water treatment compounds as recommended by your qualified water treatment company (if necessary) to bring the pH within the specified range.
- Heat the water in the boiler to 82ºC (180ºF) to de-aerate the water.

Guidelines for CTB Operation

After proper and safe CTB boiler setup and installation has been accomplished, CTB operation proceeds as follows:

(a) Refer to Section 6 for instructions on starting the CTB.
(b) Following burner startup, set the operating control dial at 82 - 93ºC (180 - 200ºF).

ATTENTION: If, during normal operation, it is necessary to add water to your system more than once a year, consult a qualified service technician to check your system for leaks. A leaky system will increase the volume of make-up water supplied to the boiler which can significantly shorten the life of the boiler and cause damage to the boiler.

SECTION 11: TROUBLESHOOTING

The following charts and tables are provided for reference in troubleshooting any difficulties encountered in boiler operation and adjustment.

- The **Flow Chart** outlines the proper sequence of events in CTB operation -- use this chart to help diagnose where a problem may be occurring.

- More specific troubleshooting information is provided in the **Troubleshooting Tables** following the flow chart. Each table lists a **Problem**, **Possible Cause**, and **Possible Action(s)** to fix the problem.

The CTB sequence of operation is summarized as follows:

(1) A call for heat by the thermostat energizes the DPDT relay which in turn energizes the circulator delay relay and the boiler loop circulator to establish a flow of water through the coil.
(2) The flow switch closes. The power then continues from the flow switch through the high limit aquastat, through the operating aquastat, and then to the burner.
(3) If the burner ignites within approximately 15 seconds and the photo unit sees a flame, the burner will continue to operate until the call for heat is satisfied or the setting of the operating aquastat is reached.
(4) If the thermostat is not satisfied, but the temperature setting of the operating aquastat is reached, the burner will stop until the return water drops the water temperature in the boiler (re-closing the operating aquastat and turning the burner back on).
(5) The boiler loop circulator will operate as long as the thermostat is calling for heat.
(6) The boiler loop circulator circuit includes a delay relay that keeps the circulator operating approximately ten minutes after the call for heat is satisfied.

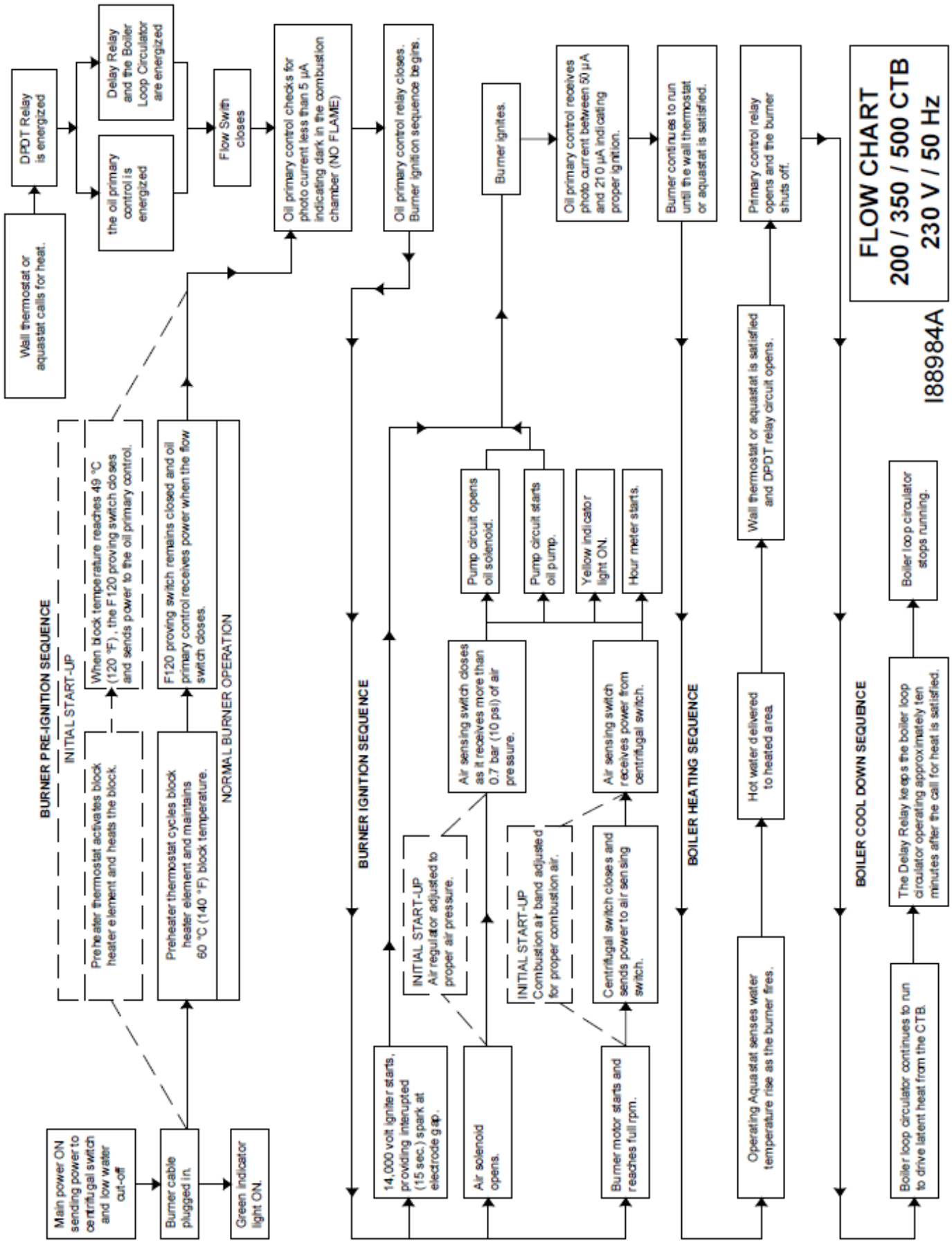
FLOW CHART
200 / 350 / 500 CTB
230 V / 50 Hz
I88984A
BURNER PRE-IGNITION SEQUENCE
INITIAL START-UP
Main power ON sending power to centrifugal switch and low water cut-off
Burner cable plugged in.
Green indicator light ON.
Preheater thermostat activates block heater element and heats the block.
When block temperature reaches 49 °C (120 °F), the F120 proving switch closes and sends power to the oil primary control.
Preheater thermostat cycles block heater element and maintains 60 °C (140 °F) block temperature.
F120 proving switch remains closed and oil primary control receives power when the flow switch closes.
NORMAL BURNER OPERATION
Wall thermostat or aquastat calls for heat.
DPDT Relay is energized
the oil primary control is energized
Delay Relay and the Boiler Loop Circulator are energized
Flow Switch closes
Oil primary control checks for photo current less than 5 µA indicating dark in the combustion chamber (NO FLAME)
Oil primary control relay closes. Burner ignition sequence begins.
BURNER IGNITION SEQUENCE
14,000 volt igniter starts, providing interupted (15 sec.) spark at electrode gap.
INITIAL START-UP Air regulator adjusted to proper air pressure.
Air solenoid opens.
Air sensing switch closes as it receives more than 0.7 bar (10 psi) of air pressure.
INITIAL START-UP Combustion air band adjusted for proper combustion air.
Burner motor starts and reaches full rpm.
Centrifugal switch closes and sends power to air sensing switch.
Air sensing switch receives power from centrifugal switch.
Pump circuit opens oil solenoid.
Pump circuit starts oil pump.
Yellow indicator light ON.
Hour meter starts.
Burner ignites.
Oil primary control receives photo current between 50 µA and 210 µA indicating proper ignition.
BOILER HEATING SEQUENCE
Burner continues to run until the wall thermostat or aquastat is satisfied.
Operating Aquastat senses water temperature rise as the burner fires.
Hot water delivered to heated area.
Wall thermostat or aquastat is satisfied and DPDT relay circuit opens.
Primary control relay opens and the burner shuts off.
BOILER COOL DOWN SEQUENCE
Boiler loop circulator continues to run to drive latent heat from the CTB.
The Delay Relay keeps the boiler loop circulator operating approximately ten minutes after the call for heat is satisfied.
Boiler loop circulator stops running.

PROBLEM	POSSIBLE CAUSE	POSSIBLE ACTION(S)
Burner won't run at all *and* Green power light is NOT ON.	1. Circuit breaker/main switch open. 2. Fuse/breaker blown. 3. Burner cable is damaged or not plugged in properly.	1. Close circuit breaker/switch. 2. Have Electrician check out electrical system. 3. Check burner cable.
Burner won't run at all *and* Green power light is ON.	1. Oil primary control has shut down on safety reset. 2. Wall thermostat is not operating. 3. Heater block is not heating up. 4. F-120 proving switch has not closed. 5. Oil primary control terminals are wired incorrectly. 6. Oil primary control is damaged.	1. Follow the directions in Section 7 to reset the oil primary control. 2. Check the wall thermostat and thermostat cable. 3. Feel the back of the burner. It should be 60ºC (140ºF). If the heater block is NOT HOT: (a) Wait 15 minutes for the heater block to heat up and re-check the back of the burner, and (b) Check the block heater thermostat and block heater element. Refer to the wiring diagram and ladder schematic in Appendix B. 4. If the block is HOT: (a) Check the red wire at the F-120 proving switch for power. If there is NO power at the red wire, refer to the wiring diagram and ladder schematic in Appendix B to troubleshoot the circuit that provides power to the proving switch. (b) If there is power at the red wire at the proving switch, check for power at the black wire. If there is NO power at the black wire, replace the F-120 proving switch. 5. Check the oil primary control: (a) Check that the "F" terminals are NOT jumped. (b) Check that the two yellow CAD cell wires are connected to the "F" terminals. (c) Check that the two thermostat wires are connected to the "T" terminals. 6. Replace oil primary control: (a) Check voltage – it must be 230 volts.

PROBLEM	POSSIBLE CAUSE(S)	POSSIBLE ACTION(S)
Burner ignites, but will not stay running and Burner shuts off on reset within 15 seconds.	1. There is a fuel delivery problem. 2. The cad cell is dirty. 3. Cad cell wires are loose. 4. Cad cell / cad cell wires are damaged. 5. The primary control is not receiving the proper ohm signal from the cad cell.	1. Follow the procedures listed in the next problem. 2. Clean and check the condition of the cad cell and cad cell wires. 3. Check that the yellow wires are connected properly at the "F" terminals on the oil primary control. 4. Replace the cad cell and cad cell wires. If the cad cell is heat damaged: (a) Clean your furnace, including the combustion chamber, flues and stack. Refer to instructions in Section 9. (b) Check for backdraft caused by exhaust fans in your building. Follow instructions in Section 8. 5. Disconnect the yellow wires from the "F" terminals. Start the burner and check the ohm reading from the cad cell. You have 10 seconds to perform this test before the burner shuts off on reset. Refer to Section 7 to reset the oil primary control. If the ohm reading is above 500 ohms: (a) Check the position of the cad cell; the cad cell must "look" straight through the central hole in the retention head. (b) Check the position of the retention head according to Appendix A
Burner ignites and runs properly, but the burner shuts off on reset periodically (e.g. the burner goes off on reset during the night and requires resetting in the morning).	1. There is air in the suction oil line due to leaks at the fittings. 2. There is air trapped in a high point in the pressure oil line	1. Follow the procedures in Section 5 to vacuum test the pump. Reinstall and properly seal the suction line fittings to eliminate air leaks. 2. Bleed the air out of the pressure oil line.

PROBLEM	POSSIBLE CAUSE(S)	POSSIBLE ACTION(S)
Burner ignites and Burner shuts off on reset sometime later during the day or night.	1. There is air in the fuel supply.	1. Prime the pump. If the pump will not prime or there is air in the oil stream from the pump bleeder, follow the steps in the next problem ("Pump will not prime.")
	2. The primary control is not receiving the proper ohm signal from the cad cell.	2. Check for proper ohm signal. Follow the procedures in the previous problem (top, page 10-4)
	3. There is insufficient air pressure.	3. Follow the instructions in Section 5 to adjust the air regulator for proper air pressure. DO NOT turn the air compressor off while the furnace is operating. If you turn the air compressor off at night, turn the wall thermostat to OFF so the burner will not run.
	4. The heater block is cold.	4. DO NOT shut off power to the furnace overnight, or the heater block will cool down, and the burner will not re-start the next morning. To turn the furnace "off" overnight, turn the wall thermostat to OFF. The heater block will stay hot.
	5. The electrodes are fouled.	5. If oil residues have built up on the electrodes and retention head, follow the instructions in Section 8 to check for proper draft overfire. Clean the electrodes and retention head as shown in Appendix A.

PROBLEM	POSSIBLE CAUSE(S)	POSSIBLE ACTION(S)
Pump will not prime and Pump motor is running.	1. There is a leak(s) in the suction line.	1. Follow the specifications in Section 4 to make sure the suction line is installed properly and that all fittings are 100% airtight.
	2. The pump is not installed so it will fill with oil during the priming process.	2. Make sure the pump head is filled with oil prior to starting the pump. See Section 5.
	3. The pump gears are dry.	3. Follow the procedure in Section 5 to fill the oil line and prime the pump.
	4. The pump seal is damaged.	4. With the pump not running, wipe your finger along the bottom of the cylinder at the pump shaft. If there is oil at the pump shaft, the seal is damaged. Replace the pump, or replace the seal. **NOTE:** Some oils will expand as they warm up. Because there is a check valve in the suction line, the expanding oil may build up pressure and damage the oil seal. Install a mini-accumulator in the 1/8" port of the canister filter to prevent the pressure build-up.
	5. The ball valve is closed.	5. Open the ball valve on the suction line.
	6. The canister filter is dirty.	6. Refer to Section 9 to clean the canister filter.
	7. The check valve is dirty.	7. Refer to Section 9 to clean the check valve.
	8. The pump is damaged or worn out.	8. Replace the pump

PROBLEM	POSSIBLE CAUSE	POSSIBLE ACTION(S)
Pump will not prime *and* Pump motor is NOT running.	1. There is NO power on the pump circuit from the burner.	1. Start the burner and adjust the air pressure regulator to 15 PSI. (a) If the amber "pump" light on the burner comes ON, the pump circuit on the burner has activated properly. Refer to the wiring diagram and ladder schematic in Appendix B to troubleshoot the pump circuit from the burner to the pump. (b) If the amber "pump" light on the burner does NOT come ON, there is a problem with pump circuit in the burner. With the burner running, check for power at the brown wire on the air pressure switch. If there is NO power at the brown wire, replace the burner motor. If there is power at the brown wire, replace the air sensing switch.
	2. The pump motor has shut off on thermal overload.	2. (a) The pump motor is too hot—the internal thermal protection switch shut the motor off. Wait for the motor to cool down; the thermal switch will automatically reset. Check voltage and amperage draw of the pump motor. Call your dealer if the problem persists. (b) The coupling is not adjusted properly, keeping the shafts of the motor and pump from turning freely. Re-position the coupling so that both shafts turn freely. (c) The shaft on the motor or oil pump will not turn freely. If you can't turn the shafts, replace the faulty part(s).

APPENDIX A

Detailed CTB Specifications

CTB Technical Specifications

Model	CB-200-CTB	CB-350-CTB	CB-500-CTB
Maximum Input	59 KW (200,000 BTUH)*	103 KW (350,000 BTUH)*	146 KW (500,000 BTUH)*
Listed Fuels	#2, #4, #5 fuel oils Used crankcase oil Used ATF Used hydraulic oil	#2, #4, #5 fuel oils Used crankcase oil Used ATF Used hydraulic oil	#2, #4, #5 fuel oils Used crankcase oil Used ATF Used hydraulic oil
Water Volume	19 Liters (5 Gallons)	45 Liters (12 Gallons)	78 Liters (20.6 Gallons)
Cabinet Dimensions	L X W X H 102cm X 74cm X 75cm (40" X 29" X 29 ½")	L X W X H 142cm X 86cm X 88cm (56" X 34" X 34.5")	L X W X H 168cm X 102cm X 107cm (66" X 40" X 42")
Overall Length (With Burner / Breach)	150 cm (59")	188 cm (74")	218 cm (86")
Approximate Weight	307 Kg (677 lbs) – dry	562 Kg (1240 lbs) - dry	725 Kg (1600 lbs) - dry
Mounting	non-combustible floor	non-combustible floor	non-combustible floor
Electrical Requirements	230 Volts / 50 Hz	230 Volts / 50 Hz	230 Volts / 50 Hz
Maximum Fuse Size	20 Amps**	20 Amps**	20 Amps**
Approximate Amp Draw	9 Amps	10 Amps	12 Amps
Maximum Oil Consumption	5.3 LPH (1.4 GPH)	9.5 LPH (2.5 GPH)	12.9 LPH (3.4 GPH)
Oil Pump	Suntec A2RA-7720	Suntec A2RA-7720	Suntec A2RA-7720
Oil Pump Motor	Bison Gear Motor 1/20 HP	Bison Gear Motor 1/20 HP	Bison Gear Motor 1/20 HP
Pump Motor Rotation	CCW shaft end	CCW shaft end	CCW shaft end
Canister Filter	Lenz DH-750-100	Lenz DH-750-100	Lenz DH-750-100
Stack Size	20 cm (8")	20 cm (8")	25 cm (10")
Approximate Air Compressor Requirements	0.06 CMM @1.7 bar 2.0 CFM @ 25 PSI	0.07 CMM @ 1.7 bar 2.5 CFM @ 25 PSI	0.07 CMM @ 1.7 bar 2.5 CFM @ 25 PSI

*Nominal values. Actual values will vary depending on installation.

**With optional accessories, 30 amps may be required.

Burner Technical Specifications

Burner	CB-500-5W (CB-200-CTB) CB-551-H3-5W (CB-350-CTB) CB-551-H5-3W (CB-500-CTB)
Ignition Transformer	Carlin (14,000 Volts)
Nozzle	Delavan 9-5 (CB-200-CTB and CB-350-CTB) Delavan 9-28 (CB-500-CTB)
Burner Motor	1/10 HP 2800 RPM With Centrifugal Switch
Burner Motor Rotation	CCW Shaft End
Compressed Air Requirements	CB-200-CTB: 0.06 CMM @ 1.7 Bar (2.0 CFM @ 25 psi) CB-350-CTB: 0.07 CMM @1.7 Bar (2.5 CFM @ 25 psi) CB-500-CTB: 0.07 CMM @ 1.7 Bar (2.5 SCFM @ 25 psi)
Oil Primary Control	Carlin
Heater Element in Preheater Block	450 Watts
Air Pressure Switch	MPL 808
Setting for Preheater Thermostat	60ºC (140ºF)

NOTE: These specifications apply to each CTB unit or coil.

Burner Technical Specifications (continued)

CB-200-CTB Hydronic Specifications

- Water flow through the boiler: 57 LPM (15 GPM) at 6.0-6.7 m (20-22 ft.) of head pressure
- 11ºC (20ºF) temperature rise
- Coil length: 34 m (112 ft) long, 2.5 cm (1") dia. steel tubing made to Sch. 40 piping specs
- Coil Volume: 19 Liters (5 Gallons)
- Coil Dry Weight: 86 Kg (189 lbs.)
- System operating pressure: 0.8 to 1.5 bar (12 to 22 psi)
- Standard relief valve setting: 2 bar (30 psi)
- Relief valve capacity: 550 MBH
- Heating surface: 3.6 m^2 (38.7 ft^2)

CB-350-CTB Hydronic Specifications

- Water flow through the boiler: 95 LPM (25 GPM) at 5.5 m (18 ft.) of head pressure
- 11ºC (20ºF) temperature rise
- Coil length: 48 m (158 ft.) long, 3 cm (1-1/4") dia. steel tubing made to Sch. 40 piping specs
- Coil Volume: 47 Liters (12.3 Gallons)
- Coil Dry Weight: 163 Kg (359 lbs.)
- System operating pressure: 0.8 to 1.5 bar (12 to 22 psi)
- Standard relief valve setting: 2 bar (30 psi)
- Relief valve capacity: 710 MBH
- Heating surface: 6.3 m^2 (68 ft^2)

CB-500-CTB Hydronic Specifications

- Water flow through the boiler: 132 LPM (35 GPM) at 6.7 m (22 ft.) of head pressure
- 11ºC (20ºF) temperature rise
- Coil length: 59 m (195 ft.) long, 3.8 cm (1-1/2") dia. steel tubing made to Sch. 40 piping specs
- Coil Volume: 78 Liters (20.6 Gallons)
- Coil Dry Weight: 240 Kg (530 lbs.)
- System operating pressure: 0.8 to 1.5 bar (12 to 22 psi)
- Standard relief valve setting: 2 bar (30 psi)
- Relief valve capacity: 970 MBH
- Heating surface: 9 m^2 (97 ft^2)

CTB Accessories and Parts Reference

C.B. Part # 500-CTB	350-CTB	200-CTB	Description
11578	90187	90199	Boiler Stacking Adapter Kit (optional)
90206	90188	90200	Boiler Stand (optional)
		35116	Flange, 1" NPT (set)
	35061		Flange, 1-1/2 NPT (set)
	35079	35079	Flange, 1-1/4 NPT (set)
	35053	35053	Flange Gasket, 3-hole
35125			500 Flange Gasket, 3-hole
28150	28150	28150	Operating Aquastat, L4006A
28149	28149	28149	High Temperature Cut-off, L4006H
35123	35123	35123	Flow Switch (without paddle)
35124	35124	35124	Stainless Steel Paddle for Taco Flow Switch (sized to fit)
	35117		Stainless Steel Paddle for M&M Flow Switch (sized to fit)
33330	33330	33330	Temp-Pressure Boiler Gauge
35136	35135	35048	Relief Valve, 2 bar (30 psi)
35049	35049	35049	Well Immersion, 3/4" NPT

Ergomax Indirect Water Heater (Heat Exchangers)*

** Contact the CB Parts/Service Department for help in specifying the appropriate model*

35096	E24, 98 liters (26 gallons)	
35097	E44, 182 liters (48 gallons)	
35098	E45, 182 liters (48 gallons)	
35099	E65, 273 liters (72 gallons)	
35100	E109, 450 liters (119 gallons)	
35107	Air Separator, EAS - 1-1/2	(1-1/2" piping with air vent)
35108	Air Separator, EAS -2	(2" piping with air vent)

Remote Temperature Controls

33557	Wall Thermostat

CTB Dimensions

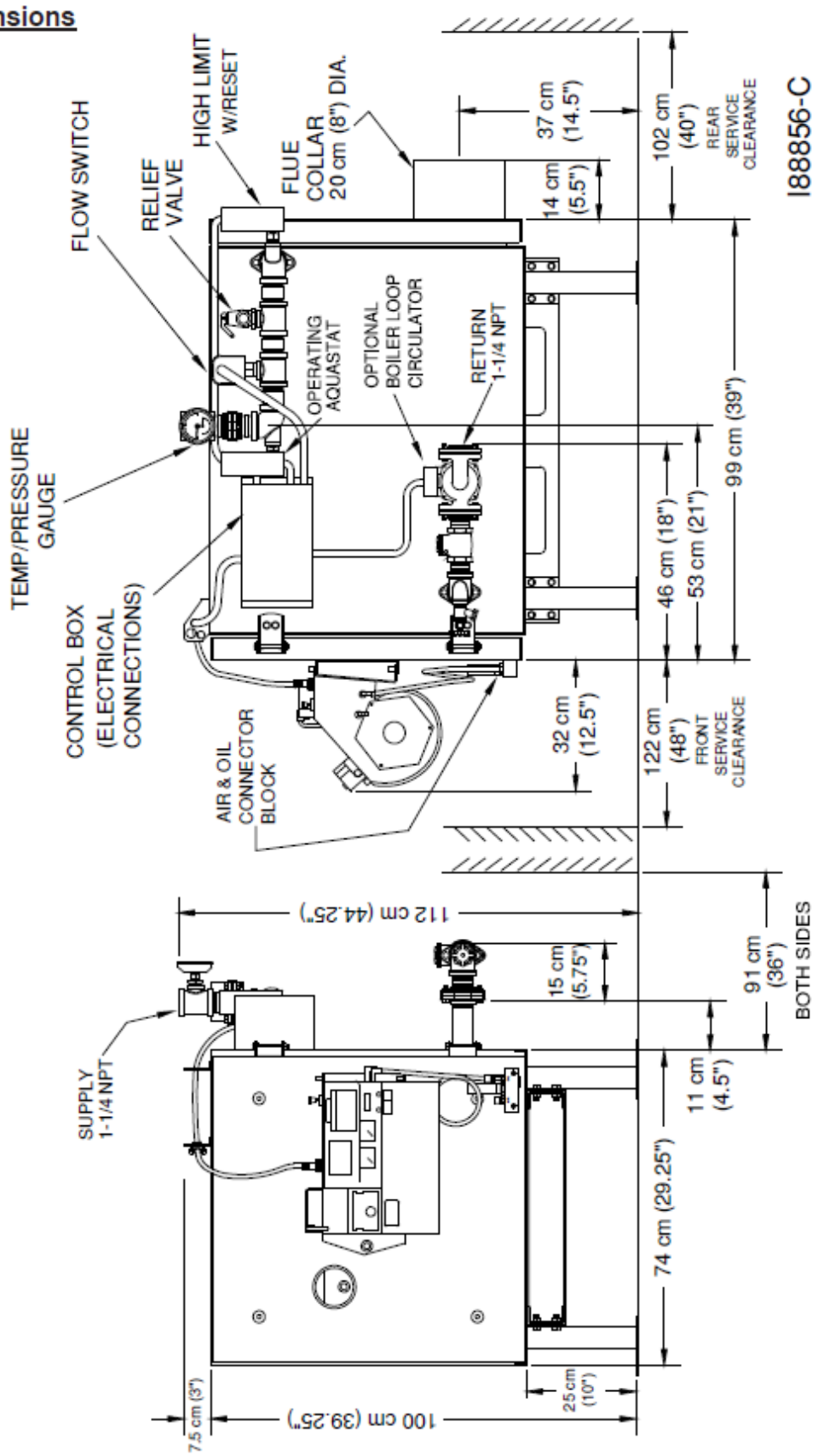

Figure A1 - Model CB-200-CTB Dimensions (Single Boiler)

CTB Dimensions

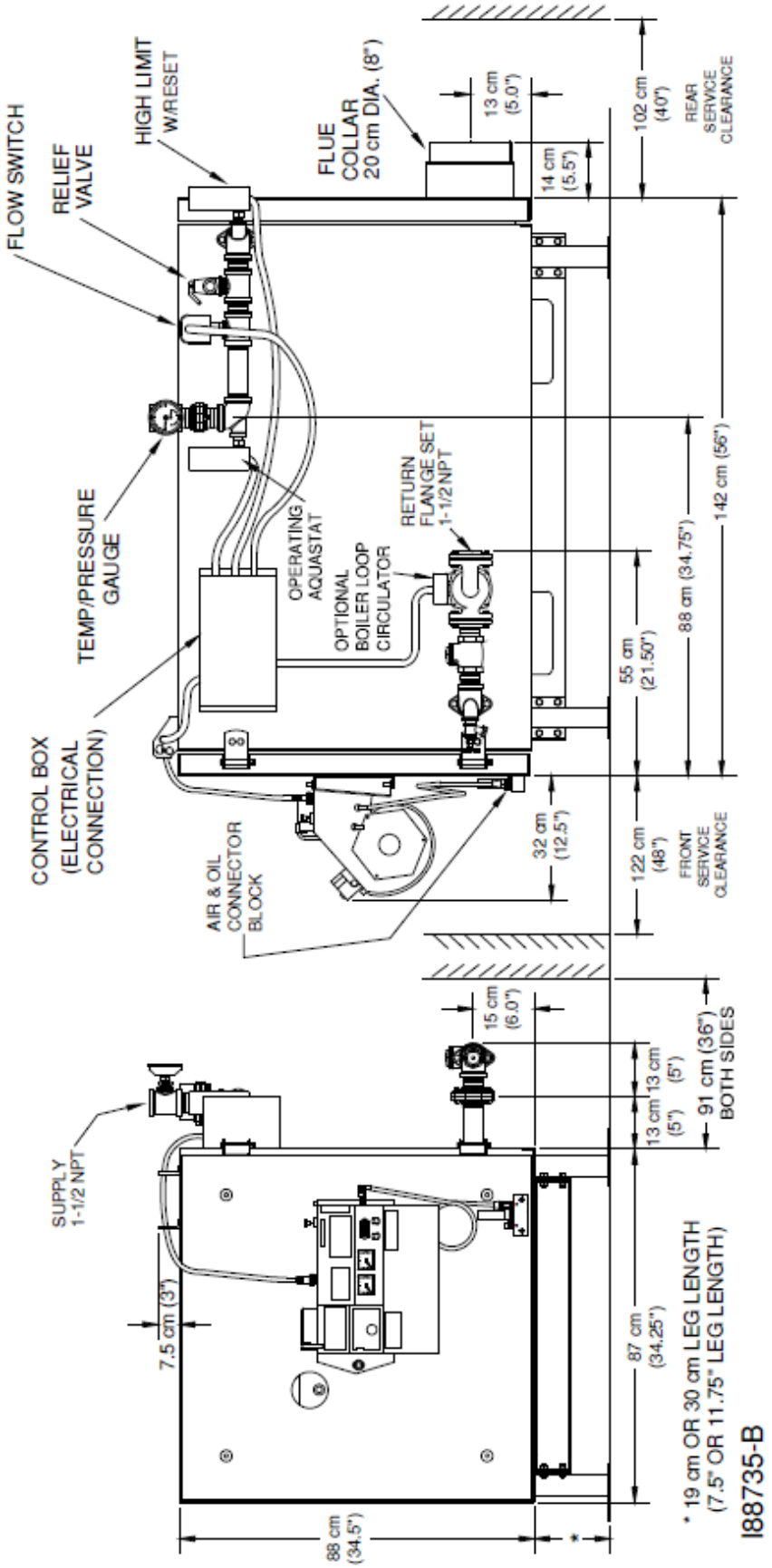

Figure A2 - Model CB-350-CTB Dimensions (Single Boiler)

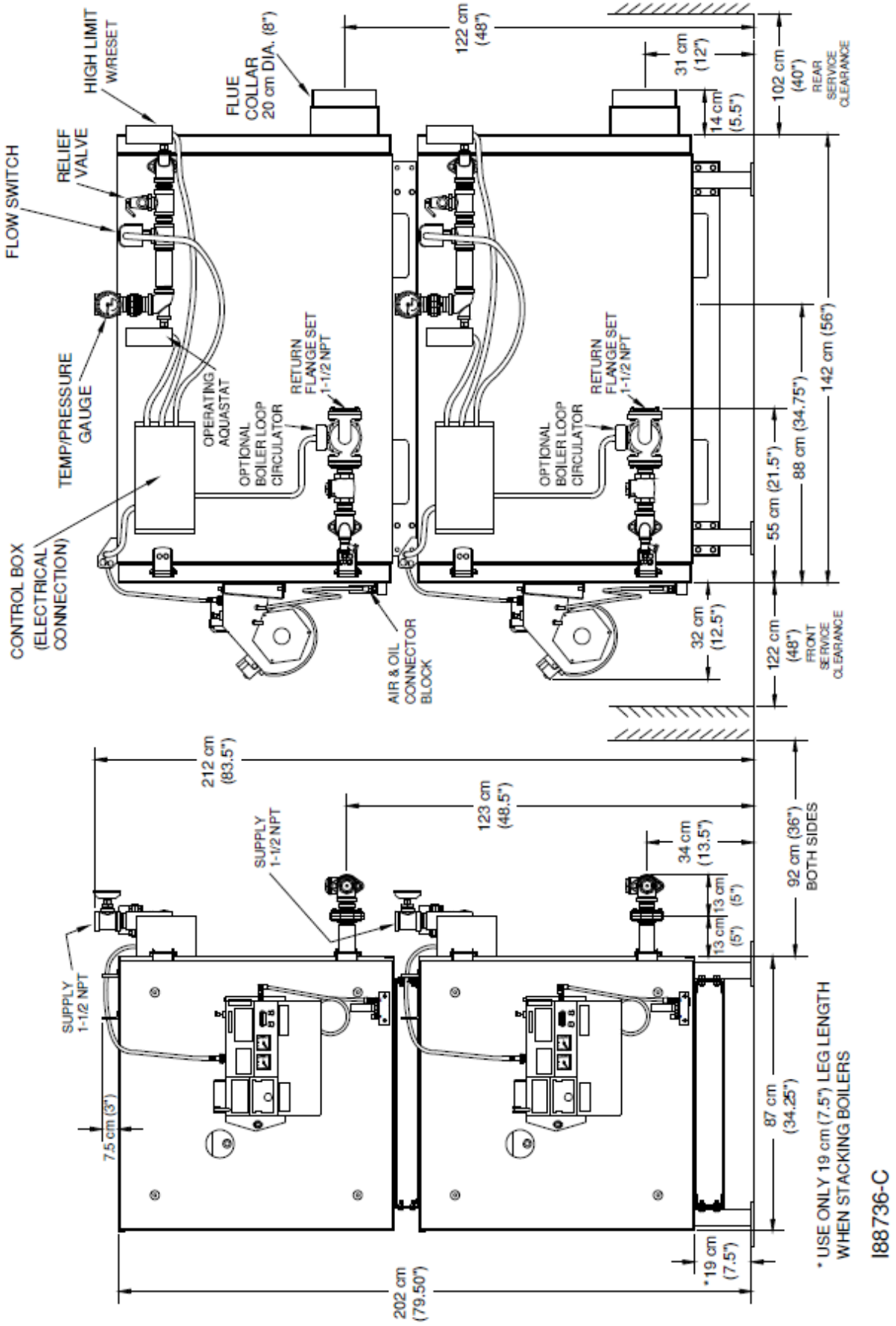

Figure A3 - Dual-Stacked Boiler Dimensions (Two CB-350-CTB Boilers)

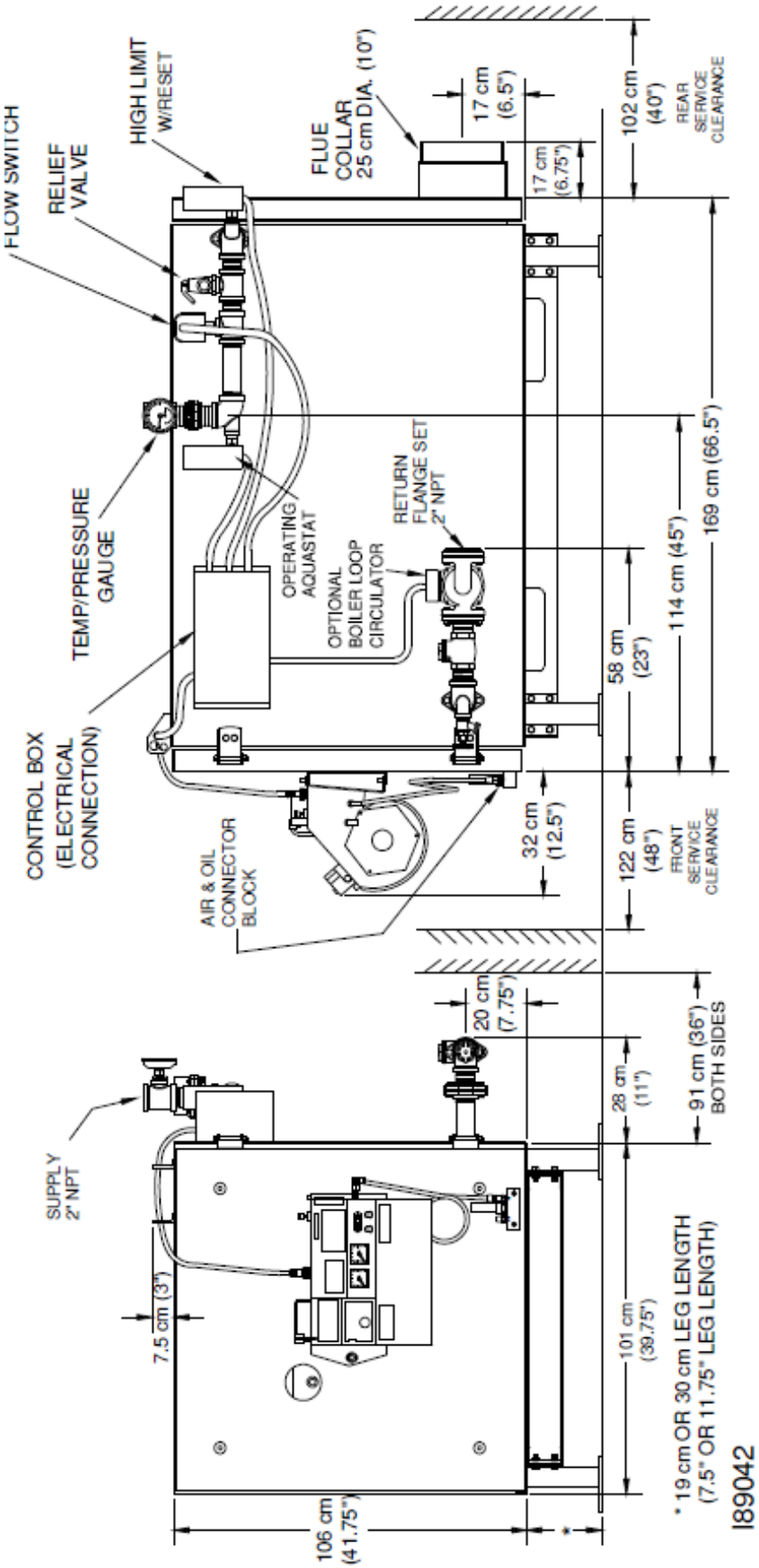

Figure A4 - Model CB-500-CTB Dimensions (Single Boiler)

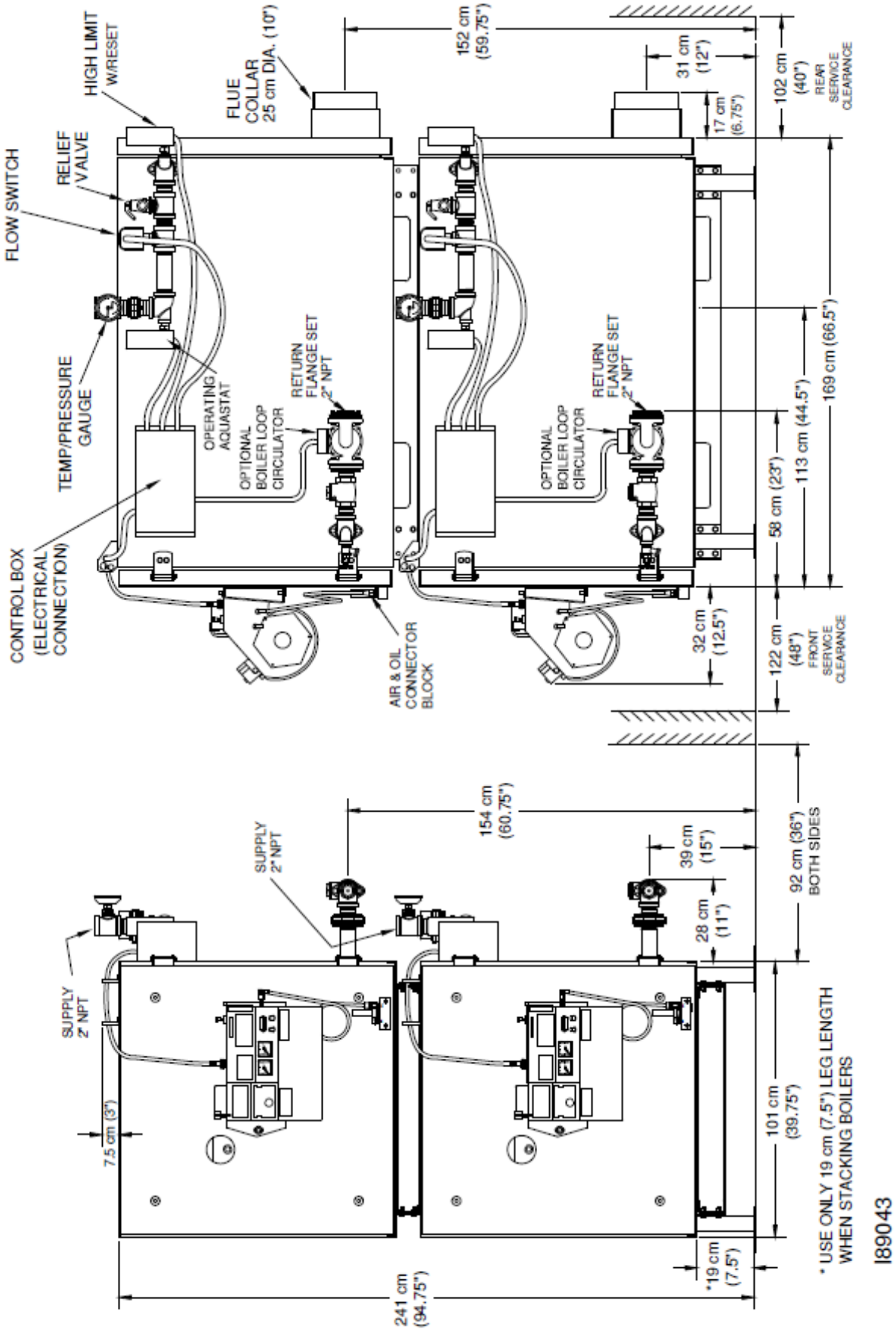

Figure A5 - Dual-Stacked Boiler Dimensions (Two CB-500-CTB Boilers)

Burner Components

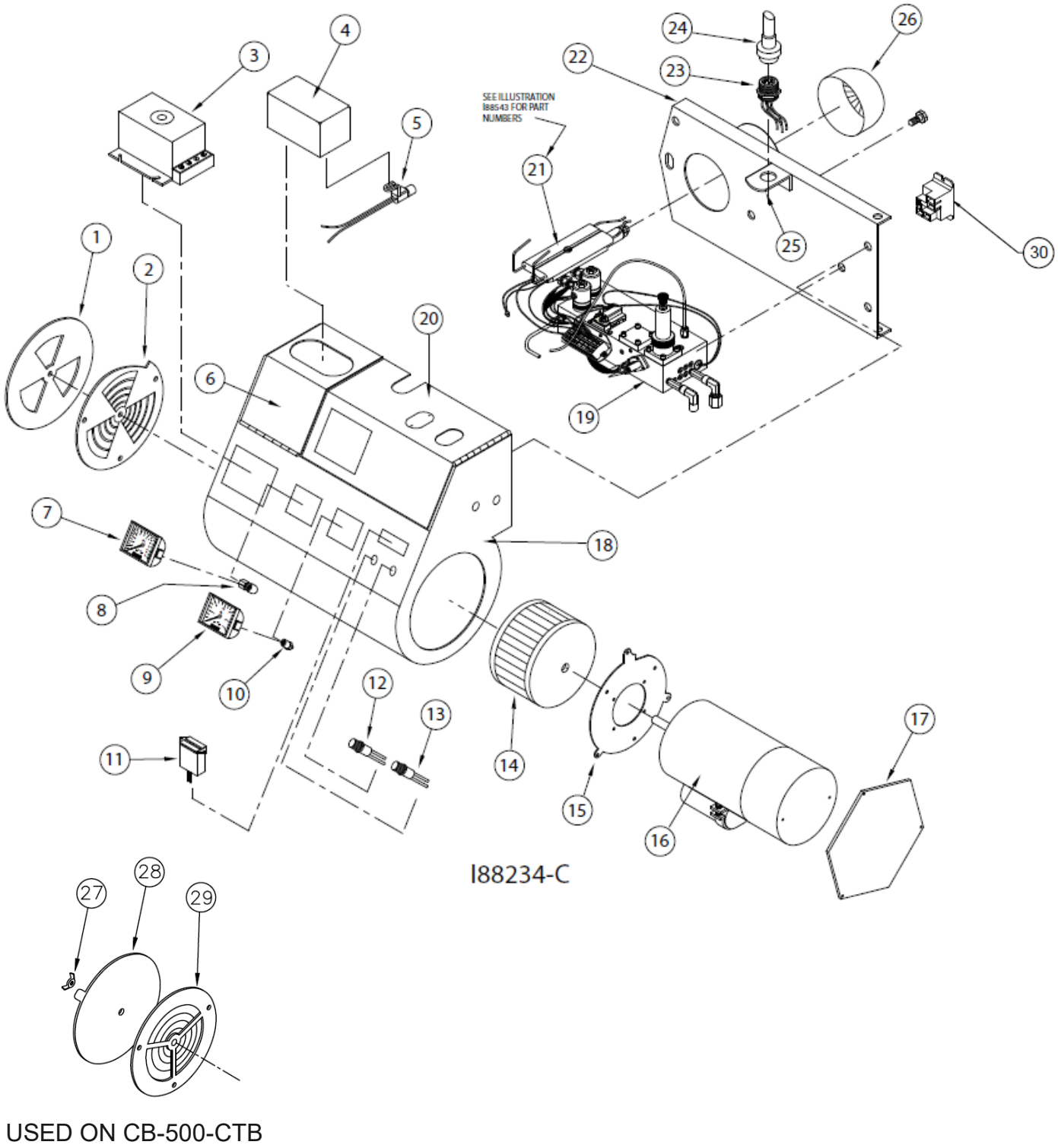

Figure A6 - Burner Component Detail

Burner Components (continued)

Item#	C.B. Part#	Component Description
1	26103	AIR INTAKE OUTER PLATE (CB-200-CTB)
	26095	AIR INTAKE OUTER PLATE (CB-350-CTB)
2	11359	AIR INTAKE INNER PLATE
3	33520	PRIMARY CONTROL (230V)
4	81011806	IGNITION TRANSFORMER (230V)
5	33576	CAD CELL FLAME SENSOR
6	26056	TRANSFORMER PLATE
7	32178	OIL GAUGE 0-15 PSI
8	32235	FEMALE ELBOW (3/16 T x 1/8 NPT)
9	32179	AIR GAUGE 0-60 PSI
10	32253	FEMALE ELBOW (1/8 TP x 1/8 NPT)
11	33161	HOUR METER (50 Hz)
12	33166	GREEN LIGHT (POWER) 230V
13	33338	AMBER LIGHT (PUMP) 230 V
14	31113	FAN SQUIRREL CAGE
15	26044	MOTOR MOUNT PLATE
16	33337	BLOWER MOTOR (230 V)
17	26053	RIGHT SIDE COVER
18	11335	HOUSING (INCLUDES ITEM 26)
19	13156	HEATER BLOCK ASSEMBLY (CB-200-CTB and CB-350-CTB)
	13182	HEATER BLOCK ASSEMBLY (CB-500-CTB)
20	11265	COVER-HINGED
21	SEE NOTE	NOZZLE ADAPTER ASSEMBLY
22	81011637	HINGE MOUNTING PLATE
23	12285	CONNECTOR RECEPTACLE
24	33479	CONNECTOR PLUG
25	81011636	LATCH BRACKET
26	11308	RETENTION HEAD (CB-200-CTB)
	11376	RETENTION HEAD (CB-350-CTB and CB-500-CTB)
27	34417	WING NUT – 5/16 INCH
28	11585	DRAFT PLATE, OUTER ASSEMBLY
29	11584	DRAFT PLATE, INNER ASSEMBLY
30	33531	COIL RELAY – 230V AC, 30 A

Burner Components (continued)

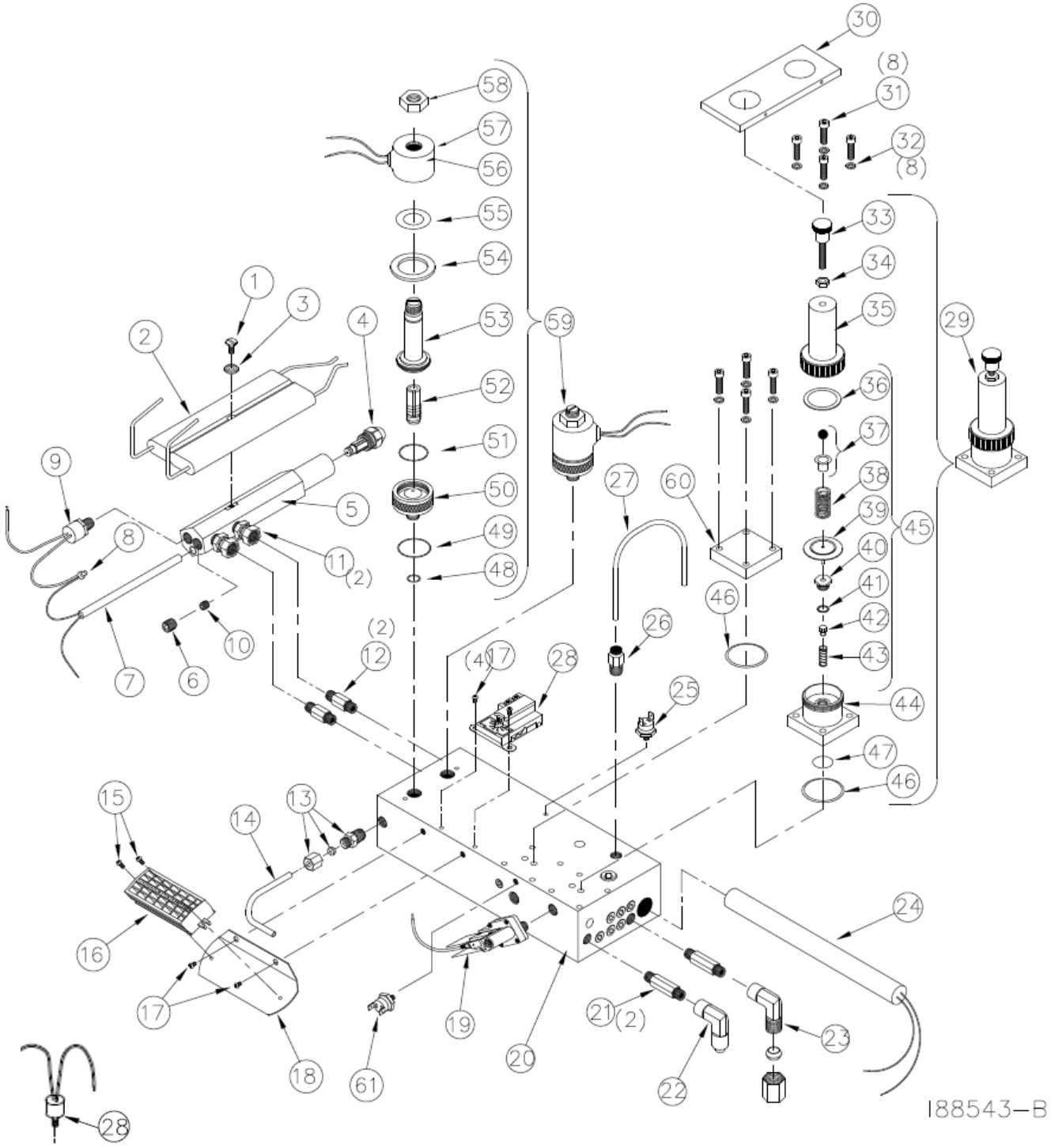

USED ON
CB-500-CTB

A7 - Preheater Block Assembly Component Detail

Item#	C.B. Part#	Qty.	Component Description
1	34326	1	ELECTRODE SCREW - 10-32 x 7/8
2	33183	1	SINGLE PIECE ELECTRODE
3	34165	1	WASHER
4	32000	1	9 - 5 NOZZLE (CB-200-CTB and CB-350-CTB)
	32006	1	9 - 28 NOZZLE (CB-500-CTB)
5	26089	1	NOZZLE ADAPTOR
6	32007	15	PLUG - 1/8 NPT
7	33375	1	140 WATTS HEATER
8	33381	1	INSULATED CAP CRIMP CONNECTOR
9	33418	1	THERMOSTAT L-130
10	32199	1	PLUG - 1/16 NPT
11	32050	2	SWIVEL FITTING
12	32189	2	HEX NIPPLE - 1/8 NPT x 1-1/2
13	32043	1	MALE CONNECTOR - 3/16T x 1/8 NPT
14	54020	1	3/16 COPPER TUBING (OIL GAUGE LINE)
15	32201	2	MACH. SCREW PHILLIPS HD. 6-32 x 3/8 Z
16	33243	1	TERMINAL BLOCK
17	34036	4	MACH. SCREW PHILLIPS HD. 6-32 x 1/4 Z
18	26059	1	TERMINAL BLOCK BRACKET
19	33057	1	AIR PRESSURE SWITCH
20	26126	1	HEATER BLOCK
21	32190	2	HEX NIPPLE - 1/8 NPT x 2
22	32202	1	FEMALE ELBOW (FOR 1/4" AIR LINE)
23	32201	1	FEMALE ELBOW (FOR 3/8" OIL LINE)
24	33289	1	PRE-HEATER ELEMENT-450 WATTS (CB-200-CTB and CB-350-CTB)
	33569	1	PRE-HEATER ELEMENT-500 WATTS (CB-500-CTB)
25	33378	1	PROVING SWITCH (NORMALLY OPEN)
26	32325	1	MALE ELBOW 1/8 x 1/8 NPT (FOR AIR GAUGE LINE)
27	54020	1	3/16 COPPER TUBING (OIL GAUGE LINE)
28	33011	1	HEATER BLOCK T-STAT N/C (CB-200-CTB and CB-350-CTB)
	33455	1	HEATER BLOCK T-STAT – L160 (CB-500-CTB)
29	32355	2	REGULATOR SURFACE MOUNT
30	14090	1	REGULATOR LOCK PLATE
31	34148	8	REGULATOR MOUNTING SCREW
32	34114	8	LOCK WASHER #8 Z
33	31261	2	REGULATOR THREADED STEM
34	34022	2	HEX NU T - 10-32 Z
35	32306	2	BONNET
36	32226	2	DIAPHRAM RING
37	32364	2	CAP AND BALL ASSEMBLY
38	32241	2	COMPRESSION SPRING
39	32360	2	DIAPHRAM
40	32305	2	BRASS POPPET SEAT
41	33311	2	POPPET ‘O” RING
42	32316	2	POPPET VALVE
43	32221	2	POPPET SPRING
44	32362	2	BASE
45	13146	2	REGULATOR KIT COMPONENTS
46	32308	2	REGULATOR OUTER “O” RING
47	32309	2	REGULATOR INNER “O” RING
48	33311	2	SOLENOID INNER “O” RING
49	33312	2	SOLENOID OUTER “O” RING
50	33313	2	MANIFOLD MOUNT SOLENOID BODY
51	33314	2	BODY “O” RING
52	33315	2	PLUNGER ASSEMBLY
53	33316	2	PLUNGER GUIDE ASSEMBLY
54	33317	2	FLUX PLATE
55	33318	2	WASHER SEAL
56	33384	2	COIL (230 V)
57	33320	2	COIL HOUSING
58	33321	2	NUT
59	33371	2	AIR/OIL SOLENOID ASSEMBLY (230 V)
60	26107	1	REG. SQUARE CAP
61	33581	1	HI TEMP LIMIT SWITCH

Burner Components (continued)

INSTALLATION OF THE SPINNER RETENTION HEAD

THE SPINNER RETENTION HEAD FITS INSIDE THE BURNER TUBE AND REQUIRES (3) SELF-TAPPING SCREWS. IT IS VERY IMPORTANT THAT THE SPINNER HEAD IS NOT TIPPED FROM SIDE TO SIDE OR FROM TOP TO BOTTOM.

NOTE: Clean Burn recommends the use of a special tool (CB Part# 70306) to set the retention head.

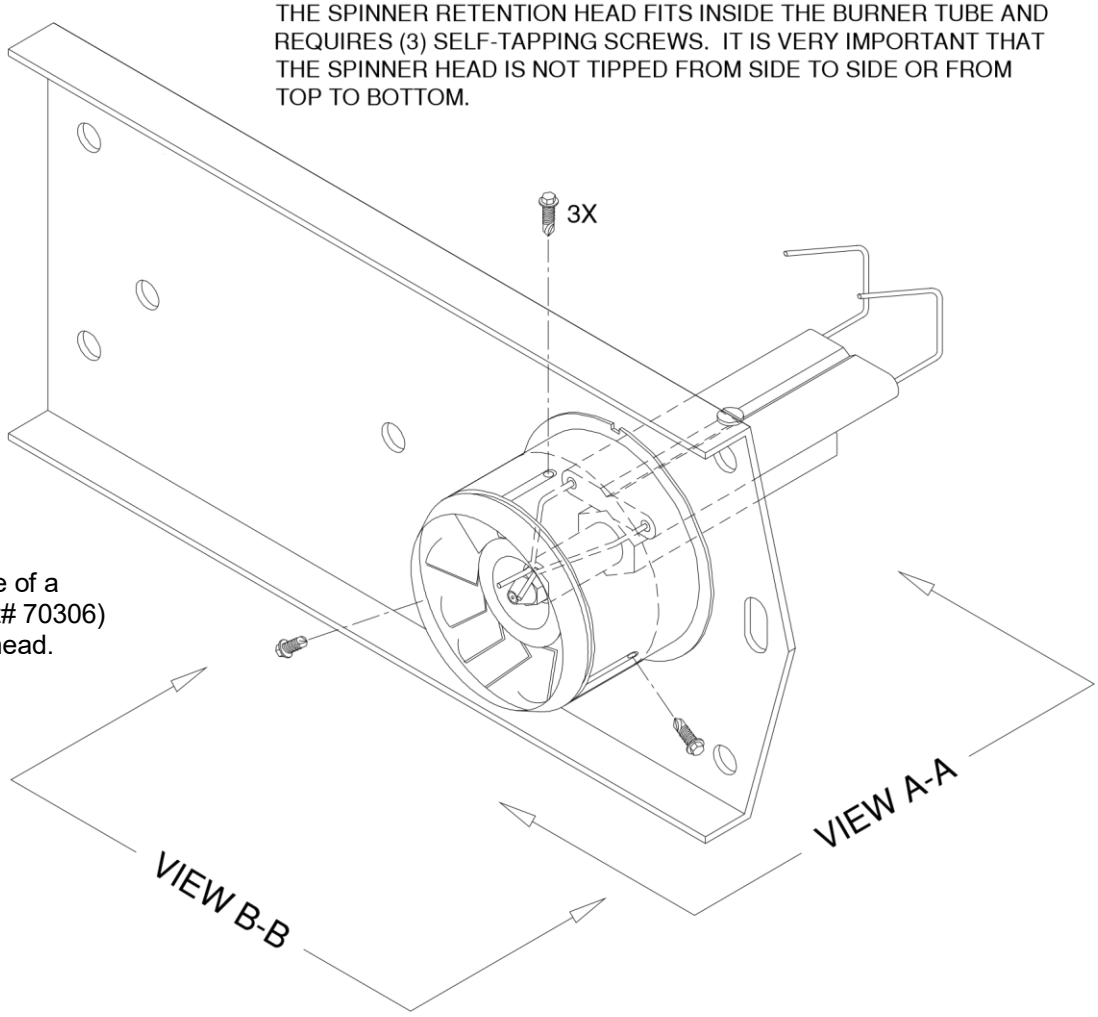

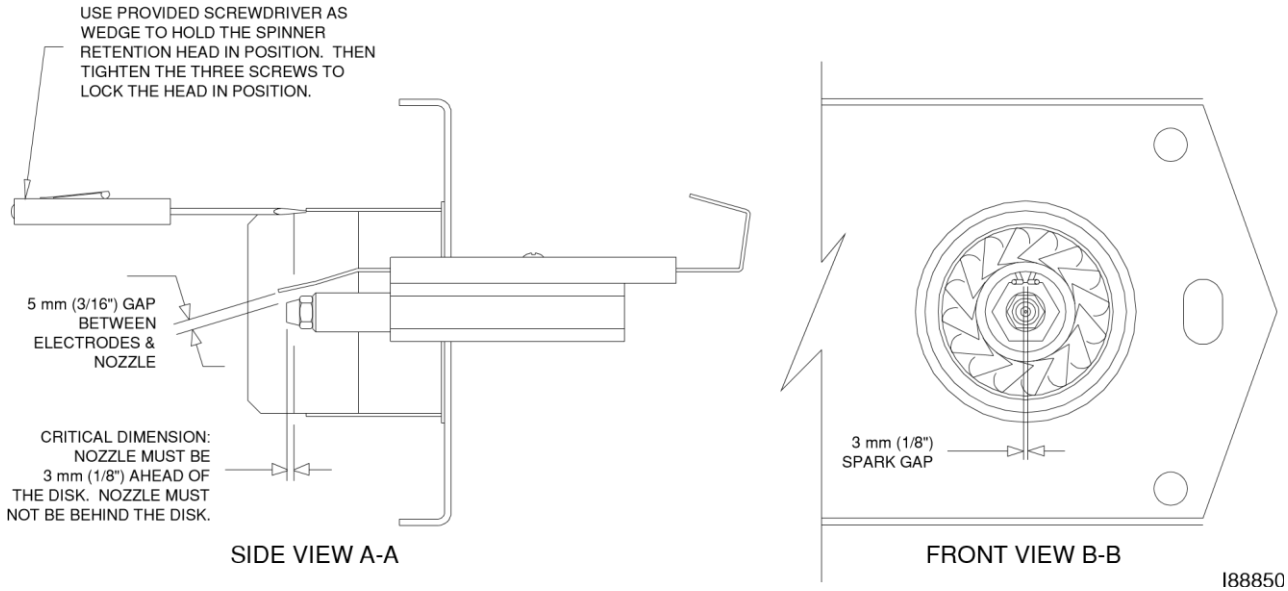

Figure A8 - Burner Electrode Specifications with Spinner Retention Head

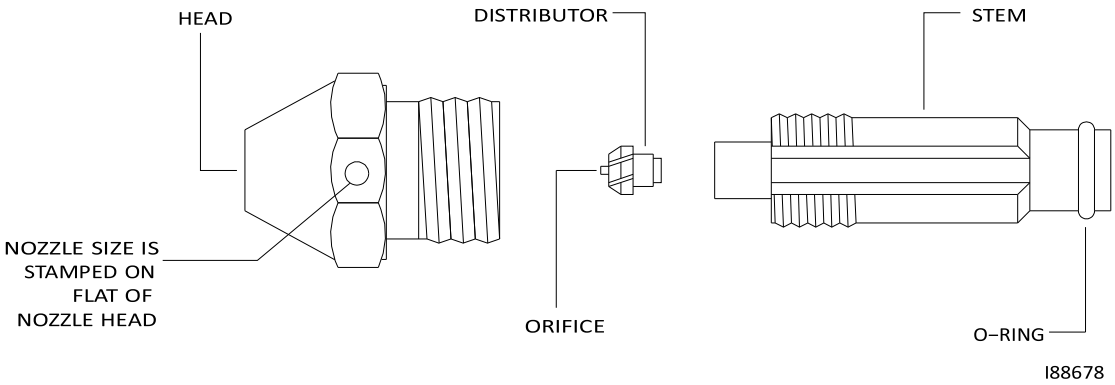

Model	Nozzle Size
CB-200 & 350-CTB	Delavan 9-5
CB-500-CTB	Delavan 9-28

Removing the Nozzle for Cleaning:

NOTE: Due to swivel fittings on the air and oil lines, it is not necessary to disconnect these lines when swinging the burner open.

1. Remove the lock-down nut on the mounting flange bolt.
2. Disconnect the burner power cable.
3. Carefully swing the burner open to its maintenance position.
4. Remove the nozzle from the nozzle adapter with a 5/8" socket.

Cleaning the Nozzle:

1. Unscrew the stem from the nozzle head.
2. Spray WD-40 or equivalent through the orifice to thoroughly remove any blockage.
   CAUTION: DO NOT damage or deform the nozzle orifice; DO NOT use a torch tip cleaner or other inappropriate device to clean the orifice. If the blockage is a "tarry" material or a hard, black material, call your Clean Burn dealer for service.
3. Flush all components with WD-40 to remove oil residues.
4. Reassemble the nozzle components. When tightening the stem, just barely "snug" it down. DO NOT overtighten.
5. Check the O-ring on the nozzle stem. Replace the O-ring if it is in the least bit cut or deformed.
6. Lubricate the O-ring on the nozzle stem with a couple of drops of new motor oil, then reinstall the nozzle.
7. Check the electrodes for proper gap and clearances.
8. Re-install the burner and adjust for optimal performance as described in Section 6.

NOTE: If the nozzle plugs within a few days after cleaning, call your Clean Burn Dealer for service.

Figure A9 - Cleaning the Nozzle

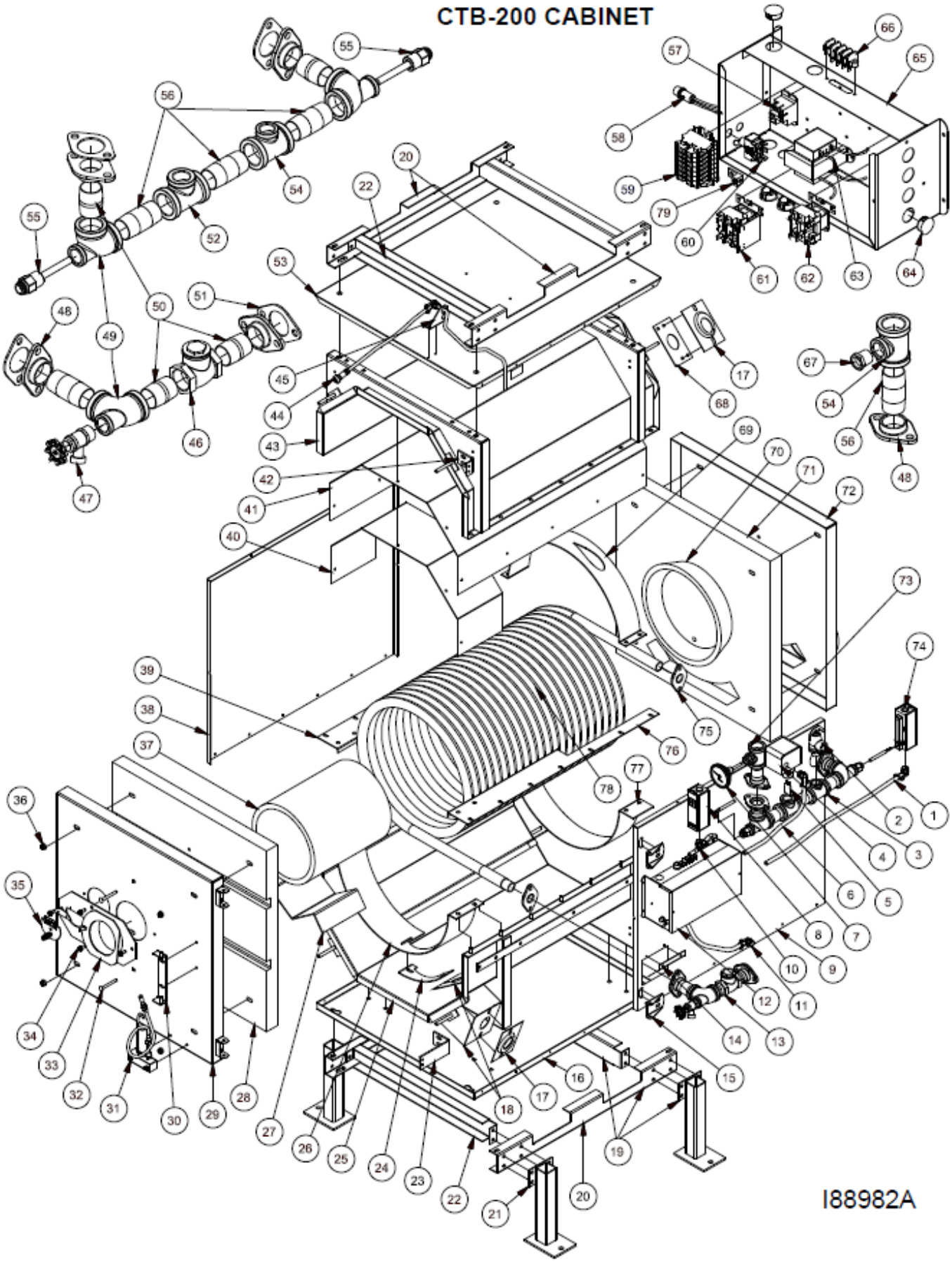
CTB-200 CABINET
I88982A

CB-200-CTB Components

Item #	Part #	Description
1	12282	WIRE HARNESS HI LIMIT A
2	35048	RELIEF VALVE 3/4 M
3	14300	PIPE MANIFOLD 1 1/4 A
4	35123	FLOW SWITCH TACO
5	35124	PADDLE FLOW SW 200CTB TACO
6	12289	WIRE HARNESS FLOW SW 200 CE A
7	33330	GAUGE BOILER, TEMP-PRESSURE
8	28150	AQUASTAT 100-200F OPERATING
9	27139	JACKET RH SIDE 200
10	12279	WIRE HARNESS OPER 200 A
11	12283	WIRE HARNESS CIR 200 A
12	12290	CONTROL BOX 230V CTB A
13	14298	PIPE & CHECK VALVE 1 1/4 A
14	27148	SHIELD RET TUBE
15	21057	HINGE BRACKET
16	27136	BASE 200 CTB
17	27189	SEAL PLATE STAMPED 200
18	27144	SEAL PLATE FRONT OUTER
19	11541	STAND 200 CTB A
20	27151	CHANNEL ADPTER FRAME 200 CTB
21	11542	LEG 200 CTB 11.4" WA
22	27122	CHANNEL F/R 200/350 ADAPTOR
23	27147	BRACKET HINGE 200 CTB
24	27146	FILLER FRONT TUBE
25	11537	BASE 200 CTB WA
26	27133	RING BURNER END
27	27155	STAND REFACY CYL 200 CTB
28	31216	INSULATION 200 FRONT DOOR
29	11540	DOOR 200 CTB WA
30	11033	HINGE BRACKET W A
31	14061	HOOK-UP KIT - 200,350,2800
32	34120	5/16-18 X 2 3/4 CARR BOLT S.S.
33	11407	BURNER MOUNT CTB WA
34	34158	1/4-20 FIN HEX NUT BRASS
35	11325	INSPECTION DOOR A
36	34009	3/8-16 HEX SERR FLANGE NUT PLT
37	21120	REFRACTORY CYL 10 X 14
38	27138	JACKET LH SIDE 200
39	27131	BAFFLE LH 200
40	27150	LINER PROTECTOR
41	27149	LINER TOP CRADLE
42	27123	BRACKET 350 HINGE
43	11538	CRADLE TOP WA
44	33534	CONN CORD 5-WIRE 51"
45	27158	BRACKET BURNER CORD
46	35115	SWING CHECK VALVE 1 1/4 NPT
47	35065	BOILER DRAIN 3/4 NPT
48	35079	FLANGE STAMPED (B&G) 1 1/4
49	35051	TEE 1 1/4 X 3/4 X 1 1/4 BLK
50	35052	NIPPLE 1 1/4 X 2 BLK
51	35053	GASKET FLANGE
52	35119	1 1/4 X 1 1/4 X 1 TEE BLK
53	27140	JACKET TOP 200
54	35066	TEE 1 1/4 X 1 1/4 X 3/4 BLK
55	35049	WELL 3/4 NPT X 1 1/2 EXT (INS)
56	35118	NIPPLE 1 1/4 X 3 BLK
57	33529	COIL RELAY 240V AC 30A
58	33338	AMBER LIGHT (230 V INT'L)
59	33468	TERMINAL BLOCK (2 CIRCUIT)
60	33286	SWITCH DPDT ON-ON
61	33352	RELAY DELAY
62	33328	RELAY DPDT
63	33340	TRANSFORMER 24-240V
64	33131	KNOCK-OUT SEAL/PLUG
65	27109	BOX JUNCTION A
66	33331	TERMINAL BLOCK (4 POST) CTB
67	35057	BUSHING 3/4 X 1/2 BLK
68	27143	SEAL PLATE REAR OUTER
69	27134	RING TOP STACK END
70	31264	EERGEY RETENTION DISC
71	31215	INSULATION 200 REAR PANEL
72	11539	PANEL REAR 200 CTB WA
73	14307	PIPE SUPPLY 1 1/4 CE A
74	28149	AQUASTAT 100-240F HIGH LIMIT
75	35116	FLANGE B&G 1 NPT
76	27132	BAFFLE RH 200
77	27129	RING BOTTOM STACK END
78	27803	COIL 1" TUBE 22.5 T 200CTB
79	33145	SCREW LUG
80	33331	TERMINAL BLOCK (4 POST) CTB

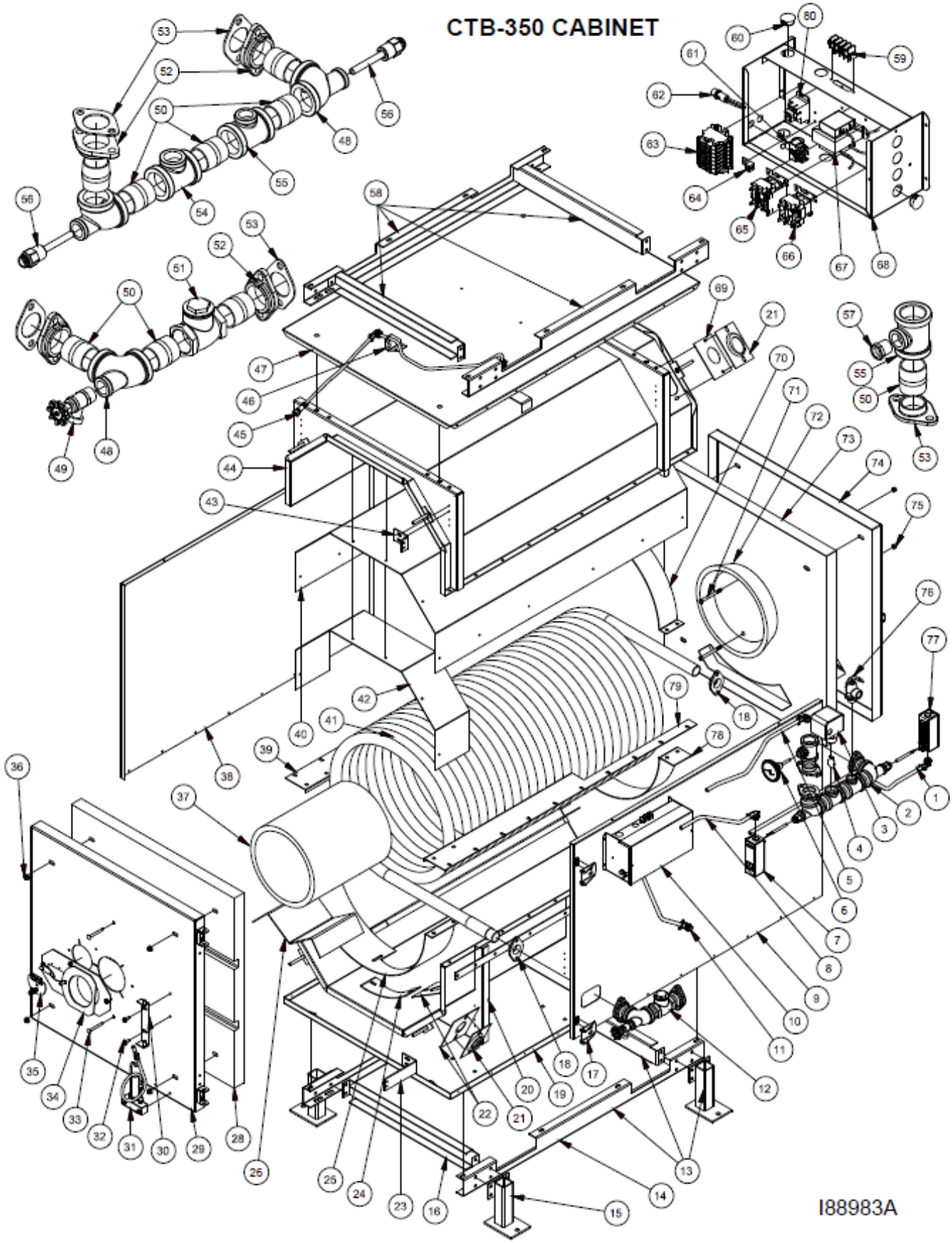
CTB-350 CABINET
I88983A

CB-350 CTB Components

Item #	Part #	Description
1	12246	WIRE HARNESS HI L A
2	14292	CTB UPPER PIPE ASSEMBLY - INTL
3	35123	FLOW SWITCH TACO
4	35124	PADDLE FLOW SW 200CTB TACO
5	12276	WIRE HARNESS FLOW SWITCH - INTL
6	33330	GAUGE BOILER, TEMP-PRESSURE
7	28150	AQUASTAT 100-200F OPERATING
8	12275	WIRE HARNESS OPER A - INTL
9	27093	JACKET R.H. SIDE
10	12250	CONTROL BOX 230 V A
11	12248	WIRE HARNESS CIR A
12	14293	CTB DRAIN PIPE ASSEMBLY - INTL
13	90188	STAND FOR 350 CTB BOLTED A
14	27121	CHANNEL SIDE 350 ADADAPTOR
15	11557	LEG KIT 7" A
16	27122	CHANNEL F/R 200/350 ADAPTOR
17	21057	HINGE BRACKET
18	35079	FLANGE STAMPED (B&G) 1 1/4
19	27084	BASE CTB
20	11373	BASE CTB WA
21	27186	SEAL PLATE STAMPED 350
22	27188	SEAL PLATE FRONT OUTSIDE
23	27193	DOOR MOUNTING BRACKET
24	27191	FILLER FRONT TUBE 350 CTB
25	27086	RING BURNER END
26	27053	STAND REFRACTORY BACK
27	27052	STAND REFRCTRY FRNT
28	31176	INSULATION 350 DOOR
29	11405	DOOR W A
30	11033	HINGE BRACKET W A
31	14061	HOOK-UP KIT - 200,350,2800
32	34158	1/4-20 FIN HEX NUT BRASS
33	34120	5/16-18 X 2 3/4 CARR BOLT S.S.
34	11407	BURNER MOUNT CTB WA
35	11325	INSPECTION DOOR A
36	34009	3/8-16 HEX SERR FLANGE NUT PLT
37	21029	CYLINDRICAL REFRACTORY
38	27050	JACKET L.H. SIDE
39	27087	BAFFLE RH
40	27090	LINER COMBUSTION CHAMBER
41	27802	COIL 1 1/4 PIPE 26.5T
42	27115	LINER PROTECTOR
43	27123	BRACKET 350 HINGE
44	11374	COVER TOP WA
45	33534	CONN CORD 5-WIRE 51"
46	27158	BRACKET BURNER CORD
47	27095	JACKET TOP CTB
48	35082	TEE 1 1/2 X 3/4 X 1 1/2 BLK
49	35065	BOILER DRAIN 3/4 NPT
50	35069	NIPPLE 1 1/2 X 2 BLK
51	35081	SWING CHECK 1 1/2
52	35061	FLANGE SET 1 1/2 NPT
53	35053	GASKET FLANGE
54	35084	TEE 1 1/2 X 1 1/2 X 1 BLK
55	35083	TEE 1 1/2 X 1 1/2 X 3/4 BLACK
56	35049	WELL 3/4 NPT X 1 1/2 EXT (INS)
57	35057	BUSHING 3/4 X 1/2 BLK
58	90187	CTB 350 BOILER STACKING KIT
59	33529	COIL RELAY 240 VAC 30A
60	33131	KNOCK-OUT SEAL/PLUG
61	33286	SWITCH DPDT ON-ON
62	33338	AMBER LIGHT (230 V INT'L)
63	33486	TERMINAL BLOCK A (SCREW)
64	33145	SCREW LUG
65	33352	RELAY DELAY
66	33328	RELAY DPDT
67	33340	TRANSFORMER 24-240V
68	27109	BOX JUNCTION A
69	27187	SEAL PLATE BACK OUTSIDE
70	27089	RING TOP STACK END
71	34150	3/8 – 16 X 4 HEX HEAD BOLT
72	31264	ENERGY RETENTION DISC
73	31166	INSULATION PANEL
74	11380	PANEL REAR 350 WA
75	34067	3/8-16 FIN HEX NUT 18-8 S.S.
76	35048	RELIEF VALVE 3/4 M
77	28149	AQUASTAT 100-240F HIGH LIMIT
78	27037	RING STACK END
79	27088	BAFFLE LH
80	33331	TERMINAL BLOCK (4 POST) CTB

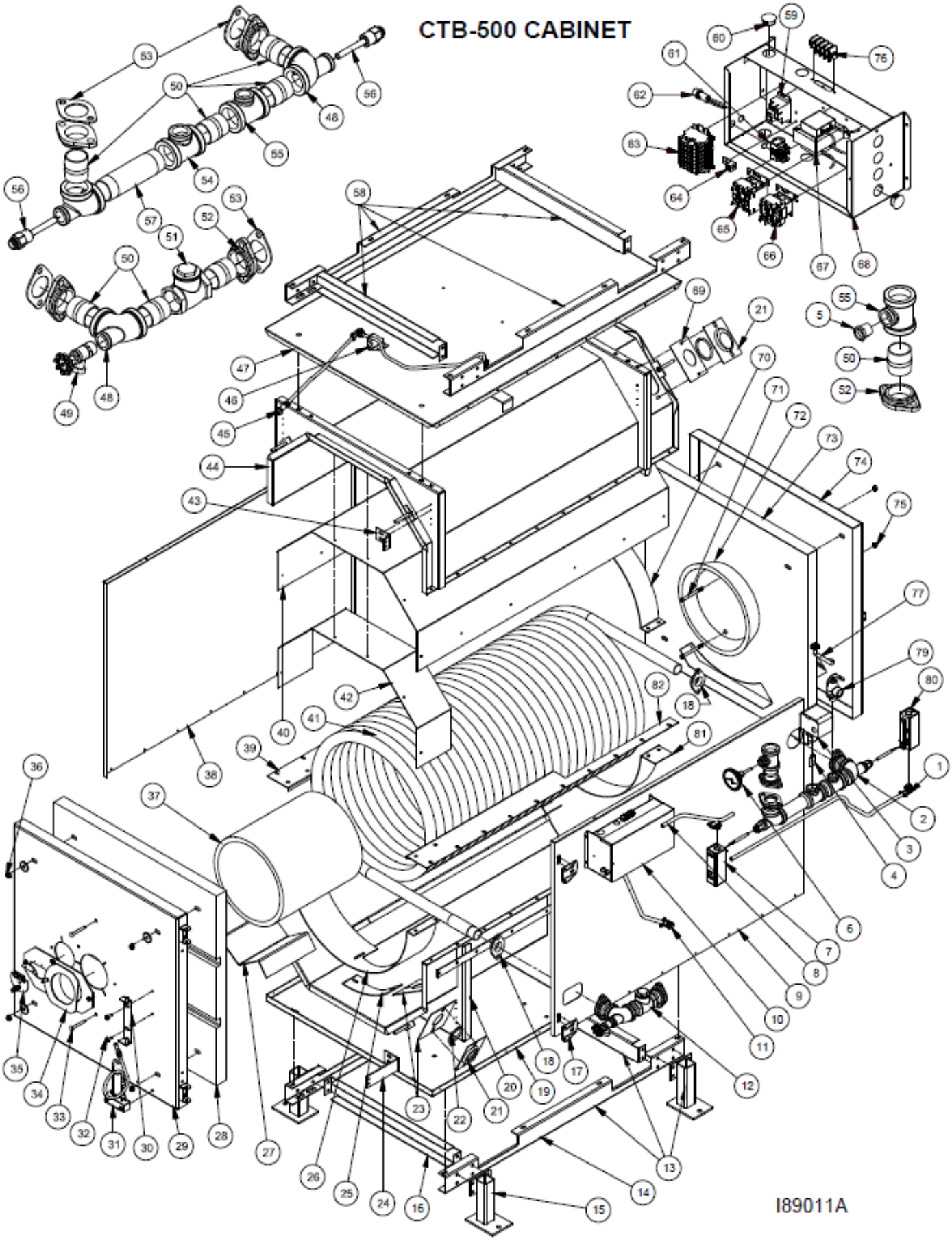
CTB-500 CABINET
I89011A

CB-500-CTB Components

Item #	Part #	Description	Item #	Part #	Description
1	12296	WIRE HARNESS HI L A	42	27180	LINER PROTECTOR
2	14315	CTB 500 UPPER PIPE ASSY.	43	27193	BRACKET 500 HINGE
3	35123	FLOW SWITCH TACO	44	11562	COVER TOP WA
4	35124	PADDLE FLOW SWITCH TACO	45	33534	CONN CORD 5-WIRE 51"
5	35057	BUSHING 3/4 X 1/2 BLK	46	27158	BRACKET BURNER CORD
6	33330	GAUGE BOILER, TEMP-PRESSURE	47	27173	JACKET TOP CTB
7	28150	AQUASTAT 100-200F OPERATING	48	35133	TEE 2 X 3/4 X 2 BLK
8	12299	WIRE HARNESS OPERATING AQUASTAT	49	35065	BOILER DRAIN 3/4 NPT
9	27172	JACKET R.H. SIDE	50	35128	NIPPLE 2 X 2 1/2 BLK
10	12290	CONTROL BOX 230V ASSY.	51	35126	SWING CHECK 2"
11	12248	WIRE HARNESS CIR A	52	35120	FLANGE 500 2" NPT
12	14314	CHECK / DRAIN PIPE ASSEMBLY	53	35125	GASKET FLANGE 2"
13	90206	STAND FOR 500 CTB BOLTED A	54	35132	TEE 2 X 2 X 1 BLK
14	27195	CHANNEL SIDE 500 ADADAPTOR	55	35131	TEE 2 X 2 X 3/4 BLACK
15	11552	LEG KIT 11 3/4" A	56	35049	WELL 3/4 NPT X 1 1/2 EXT (INS)
16	27122	CHANNEL F/R 200/350/500 ADAPTOR	57	35127	NIPPLE 2 X 6 BLK
17	21057	HINGE BRACKET	58	11578	CTB 500 BOILER STACKING KIT
18	35121	FLANGE 500 1 1/2 NPT	59	33529	COIL RELAY 240V AC 30A
19	27170	BASE CTB	60	33131	KNOCK-OUT SEAL/PLUG
20	11572	BASE CTB WA	61	33286	SWITCH DPDT ON-ON
21	27178	SEAL PLATE STAMPED 500	62	33338	AMBER LIGHT 240V
22	54013	ROPE-FIBERGLASS 44in	63	33486	TERMINAL BLOCK A (SCREW)
23	27177	SEAL PLATE FRONT OUTSIDE	64	33145	SCREW LUG
24	11581	DOOR MOUNTING BRACKET	65	33352	RELAY DELAY
25	27179	FILLER FRONT TUBE 500 CTB	66	33328	RELAY DPDT
26	27166	RING BURNER END	67	33340	TRANSFORMER 24-240V
27	27200	STAND REFRACTORY 1 Pc 500	68	27109	BOX JUNCTION A
28	31240	INSULATION 500 DOOR FRONT	69	27176	SEAL PLATE FLAT REAT
29	11564	DOOR WA FRONT	70	27167	RING TOP STACK END
30	11582	HINGE BRACKET 3 DEG. W. A.	71	34150	3/8 – 16 X 4 HEX HEAD BOLT
31	14103	HOOK-UP KIT - 5000	72	31264	ENERGY RETENTION DISC
32	34158	1/4-20 FIN HEX NUT BRASS	73	31239	INSULATION REAR DOOR 500
33	34120	5/16-18 X 2 3/4 CARR BOLT S.S.	74	11563	REAR 500 WA DOOR / BREACH
34	11407	BURNER MOUNT 3 DEG. CTB W.A.	75	34067	3/8-16 FIN HEX NUT 18-8 S.S.
35	11325	INSPECTION DOOR A	76	33331	TERMINAL BLOCK (4 POST) CTB
36	34009	3/8-16 HEX SERR FLANGE NUT PLT	77	12298	WIRE HARNESS FLOW SWITCH
37	21174	CYLINDRICAL REFRACTORY	79	35136	RELIEF VALVE 3/4 FM
38	27171	JACKET L.H. SIDE	80	28149	AQUASTAT 100-240F HIGH LIMIT
39	27163	BAFFLE L.H.	81	27165	RING STACK END
40	27181	LINER COMBUSTION CHAMBER TOP	82	27164	BAFFLE RH
41	27804	COIL 1 1/2 PIPE 28.5T 500CTB			

APPENDIX B – Wiring Diagrams

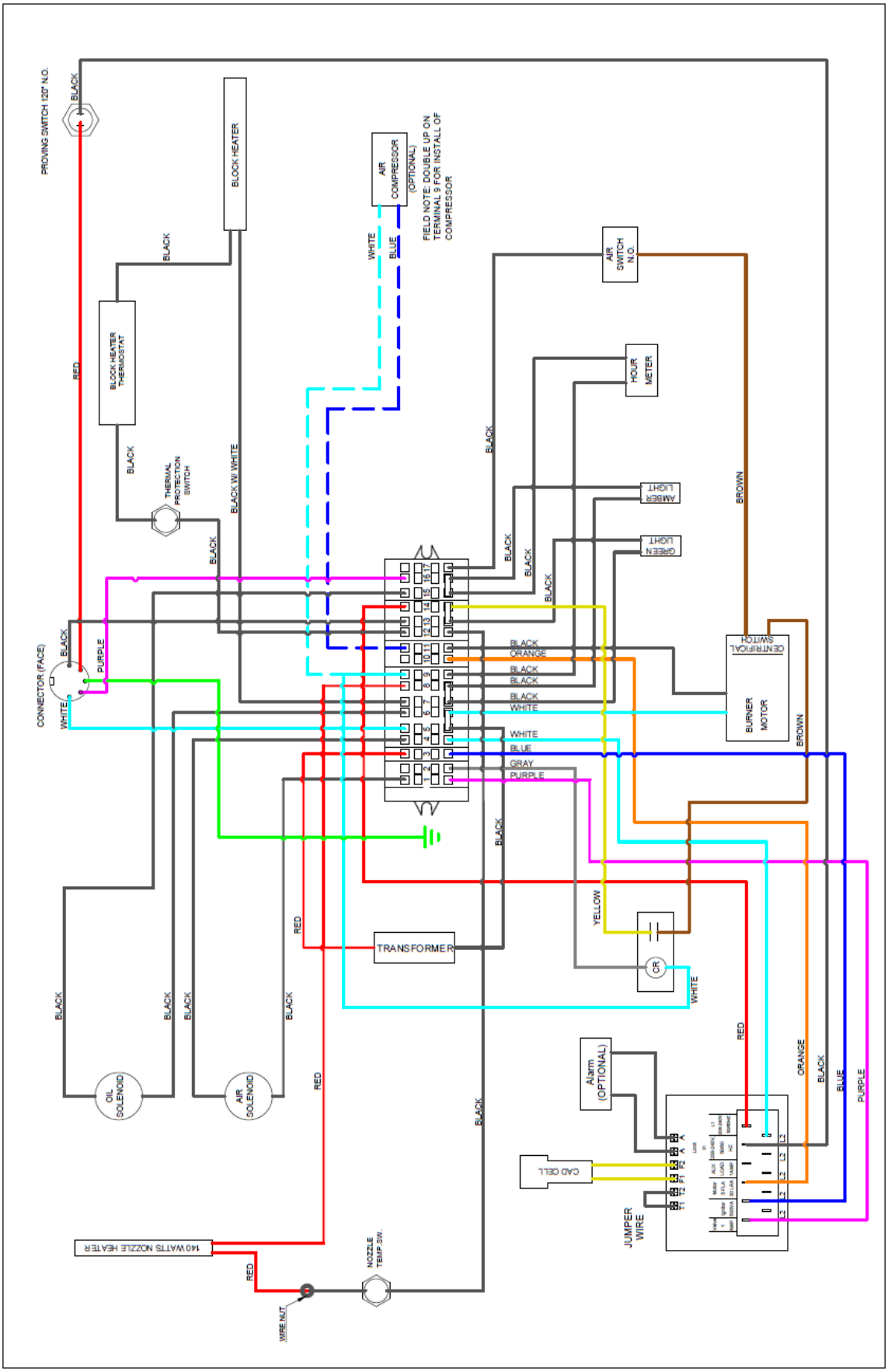

Figure B1 – Burner Wiring Diagram (230 Volts / 50 Hz)

NOTE 1:

TDR TIMER CONTACT CLOSES INSTANTANEOUSLY WHEN RELAY IS ENERGIZED (TRIGGERED BY CR2) AND OPENS 10 MINUTES AFTER CR2 IS DE-ENERGIZED

NOTE 2:

D P D T TOGGLE SWITCH ON BOILER CABINET
TOGLE DOWN: BURNER
TOGGLE UP : PRIME

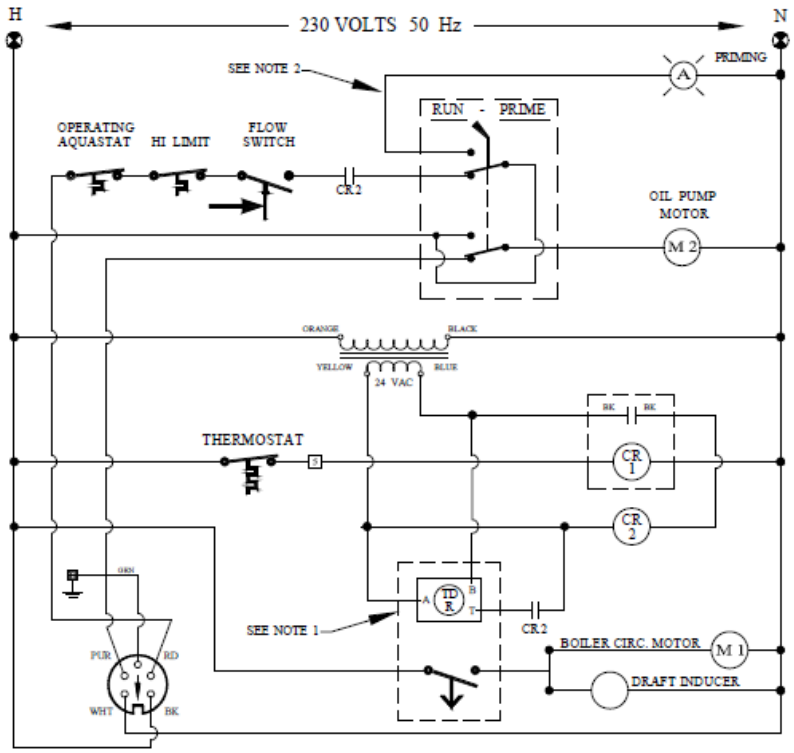

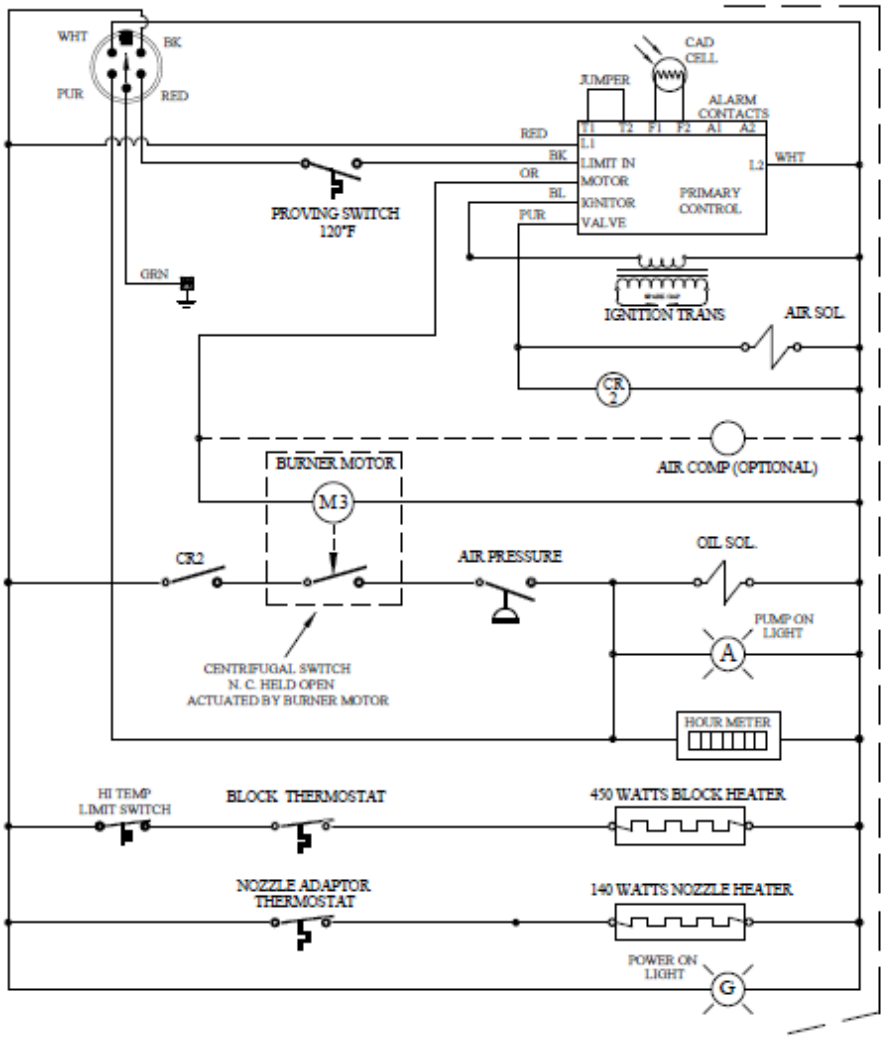

- CONNECTION TO CUSTOMER POWER

□ - CONNECTION AT TERMINAL BLOCK INSIDE BOILER CONTROL BOX

Figure B2 – Coil Tube Boiler Ladder Schematic (230 Volts / 50 Hz)

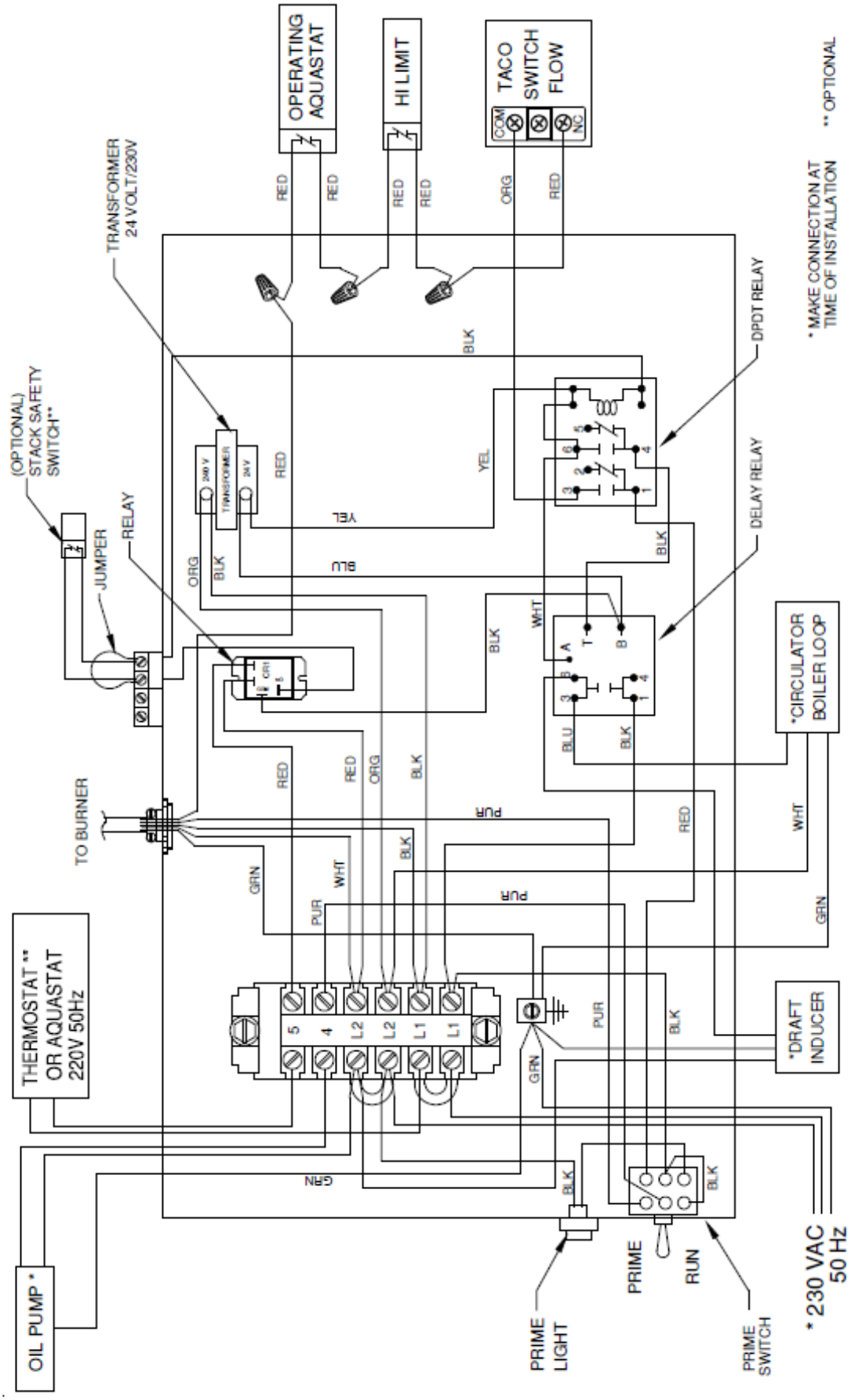

Figure B3 - Control Box Wiring Diagram

Wiring Diagrams (continued)

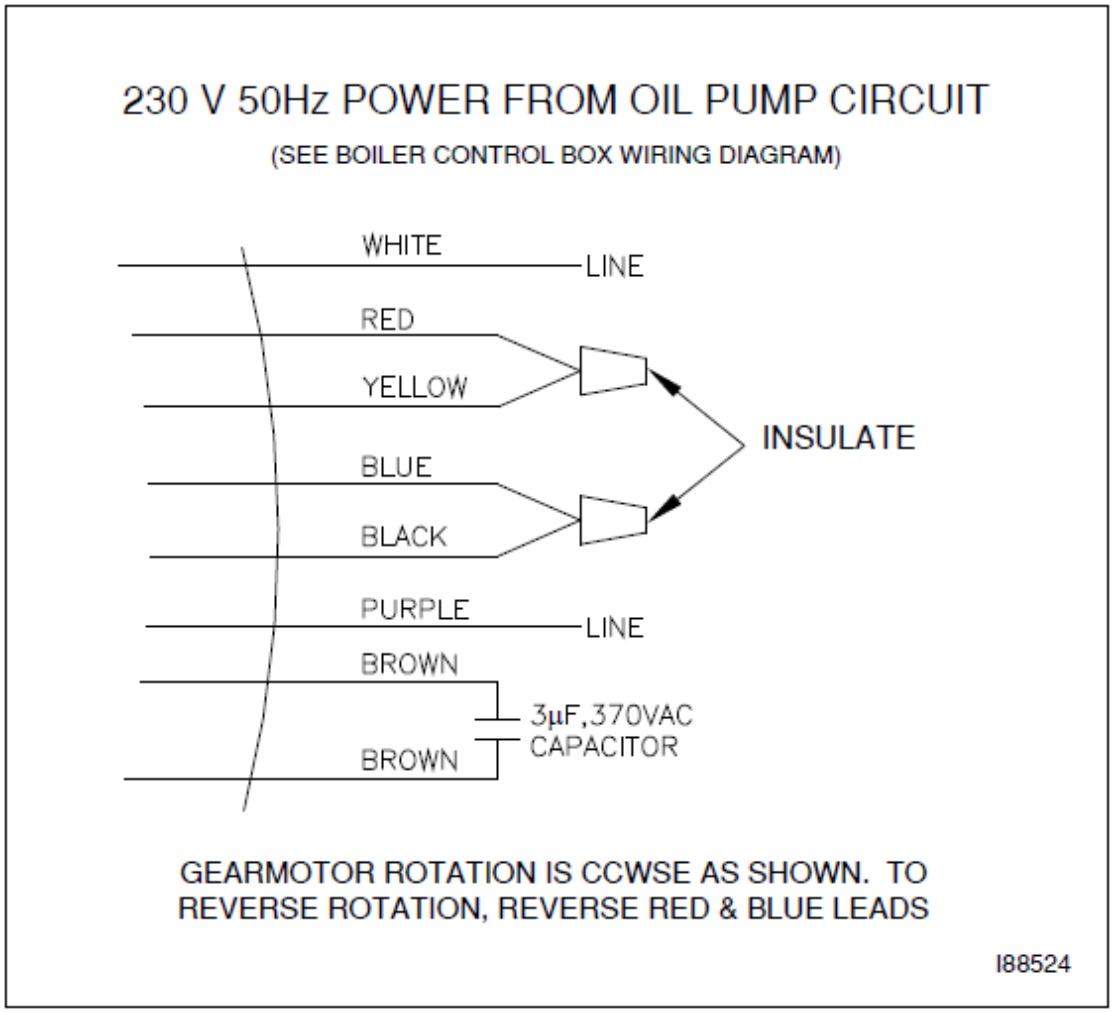

Figure B4 - Metering Pump Wiring Schematic

Understanding the Oil Primary Control

Model 33520 Cad Cell Oil Primary Control Data Sheet

Carlin®
Combustion Technology, Inc.

Model 60240 CAD Cell Oil Primary Control Data Sheet

- **Oil pump bleed assist**
  60 seconds
- **CAD cell resistance monitoring jack**
  Works with any multimeter
- **Recycle on flame failure**
- **Serviceman Reset Protection**
  Latch-up after 3 consecutive lockouts
- **Diagnostic LEDs**
  Status, lockout, flame
- **Increased flame accuracy**
- **Thermostat/aquastat compatible**
- **Improved SMC Technology**
  Zero bleed voltage during standby
- **Works well with generators**
  Insensitive to frequency changes
- **Early spark termination (optional)**
- **Alarm contacts**
- **Flame signal test jack**

Power input *(red/white wire)*	208-240 VAC, 50/60 HZ, 9 VA
Limit circuit input *(black wire)*	208-240 VAC, 50/60 HZ
Motor load	5 FLA / 30 LRA
Ignitor load	208-240 VAC, 50/60 HZ, 500 VA
Valve load	208-240 VAC, 50/60 HZ, 1.0 AMP
Aux load	208-240 VAC, 50/60 HZ, 1.0 AMP

Alarm contacts	24 V, AC/DC, 2A
Operating temperature limits	+32°F to +140°F
Storage temperature limits	-40°F to +185°F
Thermostat anticipator current	0.1 A, AC
CAD cell resistance *(with flame)*	R < 1500 OHMS

Installing and Wiring

WARNING The 60240 control must be installed and serviced only by a qualified service technician.

1. Always disconnect power source before wiring to avoid electrical shock or damage to the control. All wiring must comply with applicable codes and ordinances.
2. Thermostat terminals (T–T) provide a current source. Never apply external power to these terminals under any circumstances.
3. Alarm terminals provide a 24 VAC/VDC-rated dry contact.

Mounting

- The control may be mounted on a 4" x 4" junction box in any convenient location on the burner, furnace or wall. The location must not exceed the ambient temperature limit, 140°F.

Wiring

- Wiring must comply with local and national electrical codes, and with the wiring diagram.

Field checks

1. Safety timing (TFI) test – Remove one CAD cell wire (F-F). Start burner. After the valve delay on period, the control should lockout within the TFI time limit. Replace CAD cell wire.
2. Flame failure test – Start burner. After flame is established (after TFI period), close the oil supply hand valve. This will cause a flame failure sequence as described on the reverse side of this data sheet. The control should recycle (restart after 65 seconds).
3. If control does not operate as described, check the wiring.

When a 60240 control is being used as a replacement for a 50240 control (no valve delay ON or motor delay OFF features), no wire will be connected to the "Valve" terminal. If a fuel valve is used, it will be wired to the "Motor" terminal along with the motor. Also the (L1) limit wire must be connected to the "L1" terminal and the "Limit In" terminal.

SEE WIRING DIAGRAMS ON NEXT PAGE

Wiring

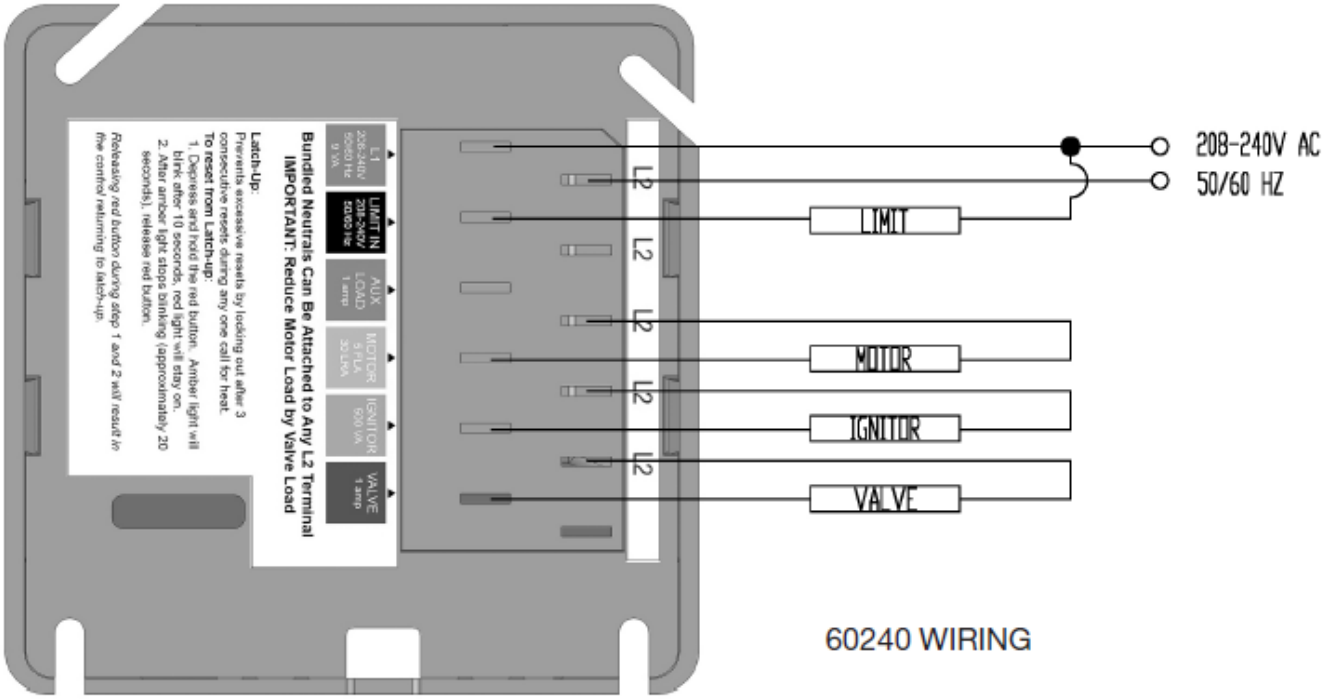
208-240V AC
50/60 HZ
L2
L2
L2
L2
L2
LIMIT
MOTOR
IGNITOR
VALVE
L1
208-240V
50/60 Hz
9 VA
LIMIT IN
208-240V
50/60 Hz
AUX
LOAD
1 amp
MOTOR
5 LRA
30 LRA
IGNITOR
600 VA
VALVE
1 amp
Bundled Neutrals Can Be Attached to Any L2 Terminal
IMPORTANT: Reduce Motor Load by Valve Load
Latch-Up:
Prevents excessive resets by locking out after 3 consecutive resets during any one call for heat.
To reset from Latch-up:
1. Depress and hold the red button. Amber light will blink after 10 seconds, red light will stay on.
2. After amber light stops blinking (approximately 20 seconds), release red button.
Releasing red button during step 1 and 2 will result in the control returning to latch-up.
60240 WIRING

Start-up & Operation

Model 60240 Diagnostic LEDs

Ⓐ – Amber OFF	Ⓐ – Amber ON	Ⓐ – Amber FLASHING
Ⓖ – Green OFF	● – Green ON	Ⓖ – Green FLASHING
Ⓡ – Red OFF	Ⓡ – Red ON	Ⓡ – Red FLASHING

WARNING Do not start the burner if the combustion chamber contains oil or oil vapor.

NOTICE Per UL requirements, the control will not turn on if the CAD cell senses flame during the self-test. If the CAD cell sees light (flame) at the beginning of a cycle, the control will remain in self-test mode until the CAD cell no longer senses light (flame). The amber LED will blink momentarily Ⓐ every 3 to 4 seconds and green LED will be on or flashing.

ⒶⒼⓇ	**Power ON**	Open all manual oil line valves. Close the line switch. (If Red LED turn on constant Ⓡ, control is in lockout. See below to reset.)
ⒶⒼⓇ	**Self-test 1**	The control performs a "boot-up" test to verify internal operation each time power is applied to the L1 wire.
	On	The amber LED turns on and the test continues for about 5 seconds. If the test fails, the control turns the amber LED off and repeats this test sequence until successful.
ⒶⒼⓇ	**Stand-by**	(No call for heat) If Self-test 1 is successful, amber LED turns off and control waits for heat call.
ⒶⒼⓇ	**Call for heat**	Set thermostat to call for heat. Thermostat circuit must be closed (and black wire must receive power from the limit circuit).
	Self-test 2	If a failure occurs in this self-check, the control won't start and the amber LED blinks 1 second on, 4 seconds off, until serviced or the problem clears. These failures include CAD cell seeing light, valve lead voltage on too early, internal fault, or low line voltage. See service section.
ⒶⒼⓇ	**Burner on**	After the self-test, amber LED turns off. The ignitor starts, followed 2 seconds later by the motor.
ⒶⒼⓇ	**Valve Delay**	The oil valve opens after the valve delay-on period (pre-purge). (For oil valve delay on operation, wire oil valve to the violet lead. If not using an oil valve, cap the violet lead to automatically disable pre-purge and post-purge).
ⒶⒼⓇ	**Pump Prime**	To enter pump prime: 1. Start a CFH cycle. During Pre-Ignition or Valve Delay On, press Reset motor turns off (10 seconds), then release the button. When motor turns back on, within 5 seconds, press the Reset button until the amber LED starts to flash. You are in Pump Prime, release Reset button.
		Optional Pump Prime notes: 1) If lost, press Reset for 1 second and release, then if the control is not in Pump Prime, restart the sequence. 2) If Reset is released before end of first 10 seconds, the control returns to Standby and restarts another CFH cycle. 3) If reset is not pressed the second time, a normal CFH cycle will continue. 4) If motor and ignitor are on and amber LED is flashing, the control is in Pump Prime. 5) Pump Prime will exit standby if flame is detected, or 60 seconds has elapsed, or loss of TT or Limit, or Reset button is pressed.
Ⓐ●Ⓡ	**TFI**	The CAD cell must sense flame within the TFI time limit (trial for ignition). Insufficient flame puts control into lockout.
Ⓐ●Ⓡ	**Run**	The burner continues firing during call for heat if the CAD cell is sensing flame. Only the green LED is on during normal running.
ⒶⒼⓇ	**Lockout**	If CAD cell does not sense flame within the TFI time limit after the burner starts, lockout occurs. The control turns the red LED on constant, and closes the alarm contact.
	To Reset	Push in and hold reset button for 2 seconds, then release.
ⒶⒼⓇ	**Latch-up**	If the control locks out 3 times during a single call for heat, latch-up occurs. The control turns on both the amber and red LED's constant. You must use the special procedure below to reset the control after latch-up.
	WARNING	Reset after latch-up- only a qualified service technician should attempt to reset the control after latchup. The problem that caused the repeated burner lockouts must be corrected before returning the burner to normal operation.
	ⒶⒼⓇ	Push in and hold the reset button for 10 seconds. The amber LED will begin to flash.
	ⒶⒼⓇ	After the LED begins flashing, continue holding the reset button for 20 seconds. The LED's will turn off. Release the reset button and the control will restart (releasing the button before the LED's turn off will cause the control to remain in latch-up).
	NOTICE	The 60240 control will not reset from lockout or latch-up if power is interrupted.
ⒶⒼⓇ	**Flame failure**	If the CAD cell loses flame signal during operation (after the TFI), the red LED flashes. The oil valve closes within 2 seconds. The motor remains on for the motor delay off period, then shuts off. Recycle: Control waits for 65 seconds (with red LED flashing), then begins again at Self-test 2. Red LED goes off Ⓡ. Note: recycle is limited to 3 consecutive times- results in lockout.

Ⓐ◐Ⓡ	NOTICE	If the green LED is blinking during a run, the flame is weak or unstable which may cause recycle.
ⒶⒷⓇ	**Motor Delay Off**	Set thermostat (or aquastat) to stop call for heat. The oil valve (if installed) will turn off within 2 seconds. The motor remains on for the motor delay off period (post-purge), then turns off. (If no oil valve is wired to the control, the burner shuts off within 2 seconds after end of call for heat. There is no post-purge.)
ⒶⒷⓇ	**Stand-by**	Control remains in stand-by mode until limit circuit sends power to the black wire and thermostat circuit closes (call for heat).

Service & Troubleshooting

Burner (control) will not come on

ⒷⒷⓇ No power to control

- Check line voltage to the control (at least 177 V for 208 V, or 204 V for 240 V).
- Check all electrical connections.

ⒶⒷⓇ Control is in lockout

- Red LED will be on. Press the reset button for 2 seconds.

◐●Ⓡ CAD cell seeing light

- Green LED on, and amber LED blinking 1 second on, 4 seconds off. Remove one yellow lead from FF terminals, and the flame test plug. If the amber LED remains flashing and green LED on, the control is defective.

If the amber and green LED's go OFF, the control is OK, and;

- light is leaking into the burner housing, *or*
- CAD cell is defective, *or*
- There is a problem with the CAD cell wiring or holder.
- If appliance was recently shut down, CAD cell may see residual hot spots in chamber.

To troubleshoot:

- Check CAD cell by plugging a 3.5mm mono plug (Flame Signal Test Jack Adaptor, Carlin part#P99017) into the CAD jack after entering TFI, or before a call for heat (for dark chamber checks). Attach the plug to a multimeter to monitor CAD cell resistance. Dark resistance should be over 50K OHMS, and room light resistance (control flipped open) should be at most 10K OHMS. Replace cell if necessary, or reinstall and close the burner housing.

NOTICE Control will not start if the plug is inserted. Also, if the plug is inserted more than two minutes, the control goes to Standby.

- Check for stray light by measuring the CAD cell resistance looking into the inactive combustion chamber. It should read at least 50 kohms.

Other no start problems

If the CAD cell is OK, and the amber LED still blinks 1 second on, 4 seconds off, the other possible failures include:

- Valve lead voltage on too early. *Correct bad connection.*
- Line voltage <177 VAC (amber LED flashes uniquely,
  1 second on, 1/2 second off, 1 second on, 3 seconds off, then repeats).
- Internal fault. If valve has no voltage, and line voltage OK, the issue may be an internal fault. *Replace the control.*

Repeated flame failures (ⒶⒷ◐ flashing red LED)

Check for:

- CAD cell is defective. *Replace.*
- Air leaking into oil line causing flame out. *Check oil line connections and filter gasket.*
- Defective nozzle causing flame to be erratic. *Change nozzle.*
- Excessive airflow or draft causing flame to leave burner head. *Check for proper air band setting and draft.*
- Excessive back pressure causing flame to be erratic. *Check appliance and flue for sooting/ plugging.*

Repeated flame failures (ⒶⒷⓇ red LED on)

Check for:

- No oil to burner. *Check oil supply, filters, lines.*
- Shorted electrodes. *Inspect for cracked porcelain and replace as needed.*
- Poor spark. Check electrode spacing and condition per burner manual. *Replace or realign if necessary.*
- Nozzle clogged. *Replace nozzle.*
- Airflow too high. *Check air band setting.*
- Ignitor module defective. *Replace if no spark.*
- CAD cell defective
- Oil valve (if used) stuck in closed position.
- Check wiring connections.

Ⓐ◐Ⓡ Blinking Green LED

- Weak or unstable flame.
- Check ohms.
- Check CO2 level.

APPENDIX C

Boiler Service Record

Boiler Purchased: Date _____ From (name/phone) _____

Boiler Installed: Date _____ By (name/phone) _____

Boiler Inspected: Date _____ By (name/phone) _____

Note: Refer to Section 9 for Maintenance Instructions

Draft Readings (Date / Draft)		Service Record (Date / Initials of Technician)						
Burner	Stack	Canister Filter	Metering Pump	Check Valve and Screen	Chamber	Stack	Oil Tank	A.P.M.*

*A.P.M. is Annual Preventative Maintenance on the Burner (Burner Tune-up)